Workshop Manual

Polo 1995 ➤

3-cylinder diesel engine									
Engine ID	AMF								

Edition 06.2005

satelettronica

Protected by copyright. Copying for private or commercial purposes, in part or in whole, is not permitted unless authorised by Volkswagen AG. Volkswagen AG does not guarantee or accept any liability with respect to the correctness of information in this document. Copyright by Volkswagen AG.

List of Workshop Manual Repair Groups

Protected by copyright. Copying for private or commercial purposes, in part or in whole, is not permitted unless authorised by Volkswagen AG. Volkswagen AG does not guarantee or accept any liability with respect to the correctness of information in this document. Copyright by Volkswagen AG.

Repair Group

00 - Technical data
01 - Self-diagnosis
10 - Removing and installing engine
13 - Crankshaft group
15 - Cylinder head, valve gear
17 - Lubrication
19 - Cooling
20 - Fuel supply system
21 - Turbocharging/supercharging
23 - Mixture preparation - injection
26 - Exhaust system
28 - Glow plug system

satelettronica

Technical information should always be available to the foremen and mechanics, because their careful and constant adherence to the instructions is essential to ensure vehicle road-worthiness and safety. In addition, the normal basic safety precautions for working on motor vehicles must, as a matter of course, be observed.

All rights reserved.
No reproduction without prior agreement from publisher.

Copyright © 2015 Volkswagen AG, Wolfsburg

00050207720

Contents

00 - Technical data . . . 1

1 Technical data . . . 1
1.1 Engine number . . . 1
1.2 Engine data . . . 1

01 - Self-diagnosis . . . 2

1 Self-diagnosis . . . 2
1.1 Features of self-diagnosis . . . 2
1.2 Technical data of self-diagnosis . . . 2
1.3 Connecting fault reader V.A.G 1551 and selecting engine electronics control unit . . . 3
1.4 Connecting vehicle diagnosis, testing and information system VAS 5051B and selecting engine electronics control unit . . . 5
2 Fault memory . . . 7
2.1 Read fault memory . . . 7
2.2 Erase fault memory . . . 8
3 Fault table: Fault codes 00515...01282 . . . 10
4 Fault table: Fault codes 16485...18076 . . . 13
5 Final control diagnosis . . . 27
5.1 Performing final control diagnosis . . . 27
6 Measured value blocks . . . 30
6.1 Safety precautions . . . 30
6.2 Reading measured value block . . . 30
6.3 Measured values at idling speed . . . 31
6.4 Measured values at full throttle . . . 39

10 - Removing and installing engine . . . 44

1 Removing and installing engine . . . 44
1.1 Notes on removing . . . 45
1.2 Securing engine to assembly stand . . . 46
1.3 Notes on installing . . . 47
1.4 Assembly mountings . . . 48
1.5 Additional notes and assembly work for vehicles with air conditioner . . . 49

13 - Crankshaft group . . . 50

1 Dismantling and assembling engine . . . 50
1.1 Assembly overview . . . 50
1.2 Removing and installing poly V-belt . . . 55
2 Removing and installing sealing flange and flywheel . . . 58
2.1 Assembly overview . . . 58
2.2 Renewing crankshaft oil seal - pulley end . . . 59
2.3 Removing and installing sealing flange - pulley end . . . 60
3 Balancer shaft and retaining frame . . . 63
3.1 Assembly overview . . . 63
3.2 Removing and installing balancer shaft . . . 64
4 Removing and installing crankshaft . . . 69
4.1 Crankshaft dimensions . . . 70
5 Pistons and conrods . . . 71
5.1 Assembly overview - pistons and conrods . . . 71
5.2 Checking piston projection at TDC . . . 73
5.3 Piston and cylinder dimensions . . . 75

15 - Cylinder head, valve gear . . . 76

Protected by copyright. Copying for private or commercial purposes, in part or in whole, is not permitted unless authorised by Volkswagen AG. Volkswagen AG does not guarantee or accept any liability with respect to the correctness of information in this document. Copyright by Volkswagen AG.
satelettronica

1 Cylinder head . . . 76
1.1 Assembly overview - cylinder head . . . 76
1.2 Removing, installing and tensioning toothed belts . . . 79
1.3 Removing and installing cylinder head . . . 84
1.4 Checking compression . . . 87
2 Valve gear . . . 90
2.1 Assembly overview - valve gear . . . 90
2.2 Reworking valve seats . . . 92
2.3 Checking valve guides . . . 94
2.4 Renewing valve guides . . . 94
2.5 Renewing valve stem seals . . . 95
2.6 Removing and installing camshaft . . . 97
2.7 Removing and installing camshaft oil seal . . . 101

17 - Lubrication . . . 104
1 Parts of lubrication system . . . 104
1.1 Engine oil . . . 104
1.2 Assembly overview - parts of lubrication system . . . 104
1.3 Removing and installing sump . . . 109
1.4 Checking oil pressure and oil pressure switch . . . 110

19 - Cooling . . . 113
1 Parts of cooling system . . . 113
1.1 Assembly overview - parts of cooling system, body side . . . 113
1.2 Assembly overview - parts of cooling system, engine side . . . 115
1.3 Coolant hose schematic diagram . . . 116
1.4 Draining and filling coolant . . . 117
1.5 Removing and installing radiator . . . 120
1.6 Removing and installing coolant pump . . . 121
1.7 Removing and installing thermostat . . . 122

20 - Fuel supply system . . . 124
1 Parts of fuel supply system . . . 124
1.1 Assembly overview - fuel tank with attachments . . . 124
1.2 Assembly overview - fuel filter . . . 126
1.3 Safety precautions when working on fuel supply system . . . 128
1.4 Rules for cleanliness . . . 128
1.5 Removing and installing fuel cooler . . . 128
1.6 Removing and installing fuel tank . . . 129
1.7 Accelerator mechanism . . . 130
1.8 Checking accelerator position sender G79 . . . 133
1.9 Adjusting accelerator position sender G79 . . . 136
1.10 Checking tandem pump . . . 137
1.11 Removing and installing tandem pump . . . 139

21 - Turbocharging/supercharging . . . 142
1 Charge air system with turbocharger . . . 142
1.1 Safety precautions . . . 142
1.2 Rules for cleanliness . . . 142
1.3 Removing and installing turbocharger with attachments . . . 142
1.4 Removing and installing parts of charge air cooling . . . 145
1.5 Charge pressure control hose routing diagram . . . 147
2 Checking charge pressure system . . . 148
2.1 Checking charge pressure control . . . 148
2.2 Checking charge pressure control valve vacuum unit . . . 152
2.3 Removing and installing vacuum unit for charge pressure control valve . . . 153

Protected by copyright. Copying for private or commercial purposes, in part or in whole, is not permitted unless authorised by Volkswagen AG. Volkswagen AG does not guarantee or accept any liability with respect to the correctness of information in this document. Copyright by Volkswagen AG.
satelettronica

Copyright by Volkswagen AG. Volkswagen AG does not guarantee or accept any liability with respect to the correctness of information in this document. Copyright by Volkswagen AG. Distribution to third parties, translation and reproduction not permitted without authorised by Volkswagen AG.

23 - Mixture preparation - injection . . . 154
1 Repairing diesel direct injection system . . . 154
1.1 Safety precautions . . . 154
1.2 Rules for cleanliness . . . 154
1.3 Fitting locations overview . . . 155
1.4 Repairing intake manifold flap . . . 156
1.5 Servicing unit injector . . . 156
1.6 Removing and installing O-rings for unit injector . . . 157
1.7 Removing and installing unit injector . . . 159
2 Checking components and functions . . . 164
2.1 Checking voltage supply for diesel direct injection system . . . 164
2.2 Checking engine speed sender G28 . . . 164
2.3 Checking intake manifold pressure sender G71 and altitude sender F96 . . . 165
2.4 Checking coolant temperature sender G62 . . . 168
2.5 Checking brake light switch F and brake pedal switch F47 . . . 169
2.6 Checking clutch pedal switch F36 . . . 170
2.7 Checking intake manifold temperature sender G72 . . . 172
2.8 Checking fuel temperature sender G81 . . . 173
2.9 Checking air mass meter G70 . . . 175
2.10 Checking intake manifold flap change-over . . . 177
2.11 Checking unit injector valves . . . 178
2.12 Checking camshaft position Hall sender G40 . . . 181
3 Checking additional signals . . . 183
3.1 Checking speed signal . . . 183
3.2 Checking signal from/to air conditioning system . . . 184
3.3 Checking speed signal . . . 187
3.4 Checking cruise control system (CCS) . . . 187
3.5 Checking data bus . . . 189
4 Renewing, coding and adapting engine control unit . . . 191
4.1 Renewing diesel direct injection system control unit J248 . . . 191
4.2 Coding diesel direct injection system control unit J248 . . . 191
4.3 Adapting diesel direct injection system control unit J248 to the electronic immobilizer . . . 192

26 - Exhaust system . . . 194
1 Parts of exhaust system . . . 194
1.1 Assembly overview - front exhaust pipe with catalytic converter and attachments . . . 194
1.2 Assembly overview - Silencer with mountings . . . 195
2 Exhaust gas recirculation system . . . 196
2.1 Assembly overview - parts of exhaust gas recirculation . . . 196
2.2 Schematic diagram for vacuum hoses . . . 197
2.3 Checking exhaust gas recirculation valve . . . 197
2.4 Checking exhaust gas recirculation . . . 198

28 - Glow plug system . . . 202
1 Glow plug system . . . 202
1.1 Checking glow plug system . . . 202
1.2 Checking glow plugs . . . 203

satelettronica

Protected by copyright. Copying for private or commercial purposes, in part or in whole, is not permitted unless authorised by Volkswagen AG. Volkswagen AG does not guarantee or accept any liability with respect to the correctness of information in this document. Copyright by Volkswagen AG.
satelettronica

00 – Technical data

1 Technical data

Engine number ⇒ page 1

Engine data ⇒ page 1

1.1 Engine number

The engine number (“code letters” and “serial number”) can be found at the joint between engine and gearbox.

Additionally there is a sticker on the toothed belt guard with “engine code” and “serial number”.

The engine code is also included on the vehicle data plate.

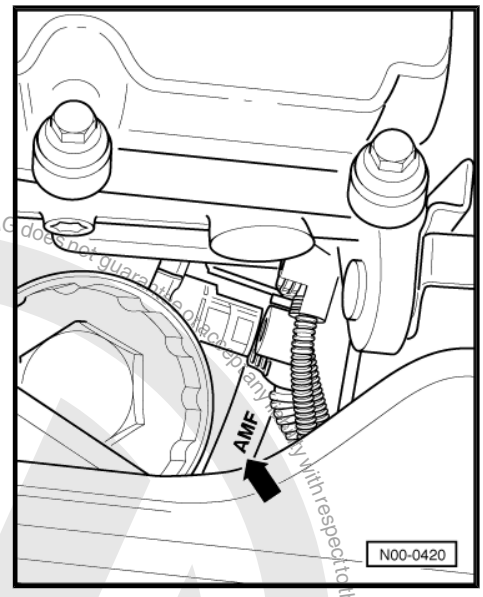

1.2 Engine data

Engine code		AMF
Manufactured		10.99 ▸
Emissions fulfil		D3 standard
Capacity	l	1.4
Output	kW at rpm	55/4000
Torque	Nm at rpm	195/2200
Bore	∅ mm	79.5
Stroke	mm	95.5
Compression ratio		19.5
CN	at least	51
Firing order		1-2-3
Catalytic converter		x
Exhaust gas recirculation		x
Turbocharging/supercharging		x
Charge air cooler		x

Protected by copyright. Copying for private or commercial purposes, in part or in whole, is not permitted unless authorised by Volkswagen AG. Volkswagen AG does not guarantee or accept any liability with respect to the correctness of information in this document. Copyright by Volkswagen AG.
satelettronica

01 – Self-diagnosis

1 Self-diagnosis

1.1 Features of self-diagnosis

The diesel direct injection system control unit -J248- is equipped with a fault memory.

After evaluating the information the engine control unit decides between more than 70 different faults ⇒ page 10 or ⇒ page 13 and stores them until the contents of the fault memory is erased.

Faults which occur temporarily (sporadically), are printed out with the addendum “sporadic fault”. These faults are indicated on display by the addendum “/SP”. The cause for a sporadic fault can be e.g. a loose contact or a brief wiring open circuit. If a sporadic fault does not occur again within 50 engine starts, it will be erased from the fault memory.

If faults are recognised which affect the driving behaviour, the glow period warning lamp flashes.

The stored faults can be read out with the fault reader -V.A.G 1551- or the vehicle diagnosis, testing and information system -VAS 5051B- ⇒ page 7 .

The fault memory must be erased after the faults have been eliminated ⇒ page 8 .

Note

General information for self-diagnosis is in the fault reader -V.A.G 1551- and the vehicle diagnosis, testing and information system -VAS 5051B- instruction manuals.

1.2 Technical data of self-diagnosis

1.2.1 Technical data

- Data transfer between control unit and fault reader -V.A.G 1551- is undertaken in the operating mode “rapid data transfer”
- Fault memory: Non-volatile memory and volatile memory[1)]

1) Will be cancelled after 50th engine start if fault has not occurred again.

1.2.2 Reading control unit version

The control unit version is displayed when the fault reader -V.A.G 1551- or the vehicle diagnosis, testing and information system -VAS 5051B- is connected and engine electronics control unit is selected ⇒ page 3 .

Protected by copyright. Copying for private or commercial purposes, in part or in whole, is not permitted unless authorised by Volkswagen AG. Volkswagen AG does not guarantee or accept any liability with respect to the correctness of information in this document. Copyright by Volkswagen AG.
satelettronica

1.2.3 Selectable functions for use of the fault reader -V.A.G 1551- or the vehicle diagnosis, testing and information system -VAS 5051B- under address word 01, engine electronics.

Note

The prerequisites for selecting the desired functions can be determined from the following table.

Selectable functions under address word 01, engine electronics

Function		Prerequisite		
Functions on fault reader -V.A.G 1551- or vehicle diagnosis, testing and information system -VAS 5051B-		**Engine stationary, ignition switched on**	**Engine running at idling speed**	**Vehicle being driven**
01	Read control unit version	yes	yes	yes
02	Read fault memory	yes[2)]	yes	yes
03	Final control diagnosis	yes	yes	no
04	Basic setting	no	yes	no
05	Erase fault memory	yes	yes	yes
06	End output	yes	yes	yes
07	Code control unit	yes	no	no
08	Read measured value block	yes	yes	yes

2) Only carry out with ignition switched on, when engine does not start.

1.3 Connecting fault reader -V.A.G 1551- and selecting engine electronics control unit

All functions previously carried out with the fault reader -V.A.G 1551- can also be carried out with the vehicle diagnosis, testing and information system -VAS 5051B- in vehicle self-diagnosis mode.⇒ Operating instructions for vehicle diagnosis, testing and information system -VAS 5051B- .

Special tools and workshop equipment required

- ♦ Fault reader -V.A.G 1551-
- ♦ Diagnosis lead -V.A.G 1551/3C-

Test prerequisites:

- Fuse 11 on fuse holder B -SB11- OK.
- The battery voltage must be at least 11.5 V.
- Earth connections on engine and gearbox OK.

Protected by copyright. Copying for private or commercial purposes, in part or in whole, is not permitted unless authorised by Volkswagen AG. Volkswagen AG does not guarantee or accept any liability with respect to the correctness of information in this document. Copyright by Volkswagen AG.
satelettronica

Procedure

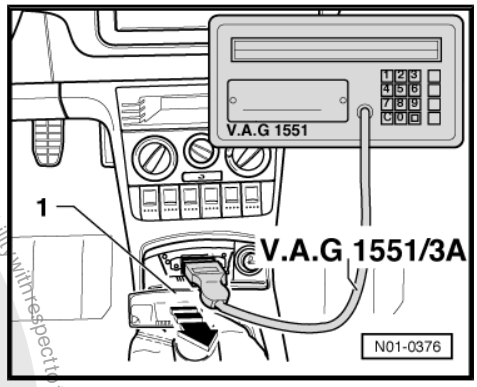

– Pull out oil dipstick -1-.

– Connect fault reader -V.A.G 1551- with diagnosis lead -V.A.G 1551/3C-.

When the fault reader has been connected:

– Depending upon desired function: Switch ignition on or start engine ⇒ page 3 .

Note

- *If the display remains blank, check voltage supply for diagnostic connector according to fault finding programme:⇒ Current flow diagrams, Electrical fault finding and Fitting locations*
- *If the display does not indicate as described in the work sequence:⇒ Fault reader operating instructions*
- *If due to an input fault "fault in the data transfer!"is displayed, pull wire off fault reader, reconnect and repeat work step.*

Indicated on display:[3)]

```
V.A.G SELF-DIAGNOSIS                    HELP
  1- Rapid data transfer*
```

Indicated on display:[3)]

```
V.A.G SELF-DIAGNOSIS                    HELP
  2 - Flash code output*
```

3) Appears alternately

– Operate fault reader -V.A.G 1551- taking into account the information on the display:

– Press button 1 for "rapid data transfer".

– Press buttons 0 and 1 for address word "Engine electronics" and confirm entry with Q button.

On display of fault reader -V.A.G 1551- the control unit identification is indicated, e.g.:

```
045906019 1.4l R3 EDC 0000 SG 1040    ->
Coding 00002                   WSC 00000
```

- 045906019 = Part No. of control unit (for up-to-date control unit version see parts catalogue)
- 1.4l = Engine displacement
- R3 = Type of engine (3-cylinder in-line engine)
- EDC = Injection system (Electronic Diesel Control)
- SG = Gearbox type: manual gearbox (AG = automatic gearbox)
- 1040 = Software version
- Coding 00002 = Coding variant

Code number	For vehicles with
00001	Automatic gearbox
00002	Manual gearbox
00003	Crash shut-off and CAN data bus manual gearbox and ABS

Copyright by Volkswagen AG. Volkswagen AG does not guarantee or accept any liability with respect to the correctness of information in this document. Copyright by Volkswagen AG. Protected by copyright. Copying for private or commercial purposes, in part or in whole, is not permitted unless authorised by Volkswagen AG.

satelettronica

- ♦ WSC xxxxx = Workshop code from fault reader -V.A.G 1551- with which coding was last carried out. (If the factory coding has not been changed, WSC 00000 appears)

– Press the → button.

Indicated on display:

```
Rapid data transfer                    HELP
Select function XX
```

– Further measures see repair procedures.

1.4 Connecting vehicle diagnosis, testing and information system -VAS 5051B- and selecting engine electronics control unit

All functions previously carried out with the fault reader -V.A.G 1551- can also be carried out with the vehicle diagnosis, testing and information system -VAS 5051B- in vehicle self-diagnosis mode.⇒ Operating instructions for vehicle diagnosis, testing and information system -VAS 5051B- .

Special tools and workshop equipment required

- ♦ Vehicle diagnosis, testing and information system -VAS 5051B-

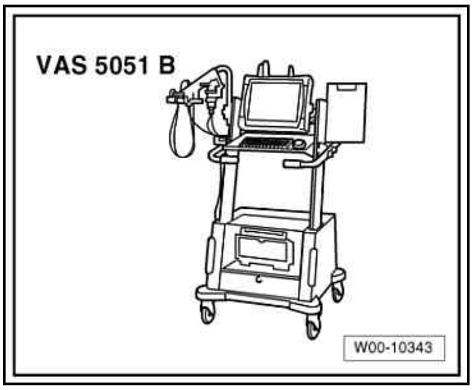

Test prerequisites

- Fuse 11 on fuse holder B -SB11- OK.
- The battery voltage must be at least 11.5 V.
- Earth connections on engine and gearbox OK.

Procedure

– Connect vehicle diagnosis, testing and information system -VAS 5051B- as follows:

Protected by copyright. Copying for private or commercial purposes, in part or in whole, is not permitted unless authorised by Volkswagen AG. Volkswagen AG does not guarantee or accept any liability with respect to the correctness of information in this document. Copyright by Volkswagen AG.
satelettronica

Protected by copyright. Copyright by Volkswagen AG. Volkswagen AG does not guarantee or accept any liability with respect to the correctness of information in this document. Copyright by Volkswagen AG. Reproduction, in whole or in part, is prohibited without the express written consent of Volkswagen AG.

– Pull out oil dipstick -1-.

– Push diagnosis lead 5m -VAS 5051B/1- connector onto diagnosis connector.

– Depending on the desired function, switch on ignition or start engine and run at idling speed. Selectable functions ⇒ page 3 .

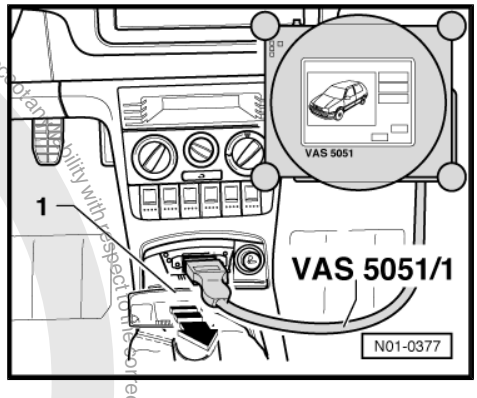

Note

- *The display fields will be displayed from top to bottom in functions 04 - Basic settings or 08 - Read data block.*
- *If the display does not indicate as described in the work sequence:⇒ Operating instructions for vehicle diagnosis, testing and information system -VAS 5051B- .*

Select operating mode:

– Press button on display for “vehicle self-diagnosis”.

Select vehicle system:

– Press “01 - Engine electronics” on display.

The control unit identification and coding -arrow- are indicated on display, e.g.:

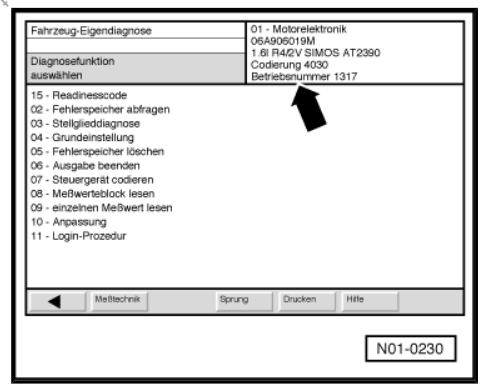

If the coding differs from the vehicle version, then:

– Check control unit coding ⇒ page 191 .

Select diagnostic function:

At this point all diagnostic functions are available.

– Press the desired function on the display.

– Further measures see repair procedures.

satelettronica

2 Fault memory

2.1 Read fault memory

Special tools and workshop equipment required

- Fault reader -V.A.G 1551-
- Diagnosis lead -V.A.G 1551/3C-

Procedure

Note

To erase the fault memory, the fault memory must always be read first!

– Connect fault reader -V.A.G 1551- and select engine electronics control unit with “address word 01”. When doing this the engine should be idling.

Only when engine does not start:

– Switch on ignition.

– Switch on fault reader -V.A.G 1551- printer using [print] button. The warning lamp in button must light up.

Indicated on display:

```
Rapid data transfer                HELP
Select function XX
```

– Operate fault reader -V.A.G 1551- taking into account the information on the display:

– Press buttons [0] and [2] for function “Read fault memory” and confirm entry with [Q] button.

The number of faults stored or “no fault recognised!” will be shown on the display.

```
X Faults recognised!
```

If one or more faults are stored:

The stored faults will be displayed and printed out one after the other.

When the stored faults have been printed out, the display will show:

```
Rapid data transfer                HELP
Select function XX
```

Note

The fault reader -V.A.G 1551- is still partly required for further fault finding. Therefore, leave the engine running and the fault reader -V.A.G 1551- connected.

– Eliminate faults printed out as per fault table ⇒ page 10 or ⇒ page 13 .

– Afterwards erase fault memory ⇒ page 8 .

If no fault is stored:

– Press the [→] button.

Indicated on display:

```
Rapid data transfer                HELP
Select function XX
```

Protected by Volkswagen AG. Volkswagen AG does not guarantee or accept any liability with respect to the correctness of information in this document. Copyright by Volkswagen AG.
satelettronica

– Press buttons 0 and 6 for function “End output” and confirm entry with Q button.

2.2 Erase fault memory

Special tools and workshop equipment required

- ♦ Fault reader -V.A.G 1551-
- ♦ Diagnosis lead -V.A.G 1551/3C-

Test prerequisite

- Fault eliminated

Note

After eliminating faults the fault memory must be read again as follows and then erased.

Procedure

– Connect fault reader -V.A.G 1551- and select engine electronics control unit with “address word 01”. When doing this the engine should be idling.

Indicated on display:

```
Rapid data transfer                HELP
Select function XX
```

– Press buttons 0 and 2 for function “Read fault memory” and confirm entry with Q button.

– Press → button until all faults still stored have been displayed and the display shows:

```
Rapid data transfer                HELP
Select function XX
```

– Press buttons 0 and 5 for function “Erase fault memory” and confirm entry with Q button.

Indicated on display:

```
Rapid data transfer                 ->
Fault memory is erased!
```

– If the fault memory will not erase there is a fault still in the system and this must be rectified.

– Press the → button.

Indicated on display:

```
Rapid data transfer                HELP
Select function XX
```

2.2.1 Automatic test sequence

During test and assembly work faults can be recognised from other control units like e.g. plug disconnected. Therefore on completion the fault memories of all control units must be interrogated and erased. To do this:

– Press button 0 twice for address word “Automatic test sequence” and confirm entry with Q button. The fault reader -V.A.G 1551- transmits all known address words one after the other.

When a control unit answers with its identification the number of stored faults appears on the display or “No fault recognised”.

Any system faults that are stored will be displayed one after the other and printed out. The fault reader -V.A.G 1551- will then transmit the next address word.

The automatic test sequence has ended when following is indicated on display: [4)]

```
V.A.G SELF-DIAGNOSIS               HELP
1 - Rapid data transfer*
```

Protected by copyright. Copyright by Volkswagen AG. Volkswagen AG does not guarantee or accept any liability with respect to the correctness of information in this document. Copyright by Volkswagen AG.
satelettronica

or

```
V.A.G SELF-DIAGNOSIS                    HELP
2 - Flash code output*
```

4) Appears alternately

– Erase all fault memories and then carry out a road test.

– Again interrogate the fault memories of all control units using the“automatic test sequence”. No faults must be stored in fault memory.

If no fault is stored:

– Press the ⏎ button.

Indicated on display:

```
Rapid data transfer                     HELP
Select function XX
```

– Press buttons 0 and 6 for function “End output” and confirm entry with Q button.

Protected by copyright. Copying for private or commercial purposes, in part or in whole, is not permitted unless authorised by Volkswagen AG. Volkswagen AG does not guarantee or accept any liability with respect to the correctness of information in this document. Copyright by Volkswagen AG.

satelettronica

3 Fault table: Fault codes 00515...01282

Note

- *The fault table is listed in ascending order, according to the 5 digit V.A.G fault code on the left.*
- *Explanations on the fault types (e.g. "open circuit/short circuit to earth"): ⇒ Fault reader operating instructions*
- *If components are indicated as faulty: First check the wiring and connectors to these components as well as the system earth connections according to current flow diagram. Only when no fault can be located here should the component be renewed. This is particularly relevant if faults are output as "sporadic" (SP).*
- *Erase fault memory after rectifying faults.*

Note

00515…003 Hall sender -G40- no signal sporadic fault

Note

- *00515 = Fault code*
- *003 = Fault type as number*
- *Hall sender -G40- = faulty current path or fault location*
- *No signal = Fault type as text*
- *Sporadic faults = Faults that are not always present e.g. loose contact*

Output on the fault reader -V.A.G 1551- printer	Possible fault cause	Possible effects	Fault elimination
00515 Hall sender -G40- No signal	♦ Hall sender -G40- defective ♦ Sender incorrect or incorrectly secured ♦ Gap dimension between sender and camshaft toothed belt pulley not OK. ♦ Wiring open circuit/ short to earth	♦ Time to start engine has increased	– Check Hall sender -G40- ⇒ page 181
Signal outside tolerances	♦ Hub with sender wheel on camshaft is twisted or loose	♦ Engine will not start ♦ Engine stalls	– Check positions of camshaft and sender wheel ⇒ page 79
00671 Cruise control system (CCS) switch -E45-			

Volkswagen AG. Volkswagen AG does not guarantee or accept any liability with respect to the correctness of information in this document. Copyright by Volkswagen AG. Reproduction in part in any form is not permitted unless authorised by Volkswagen AG. Copyright for private and commercial use is not permitted.

satelettronica

Output on the fault reader -V.A.G 1551- printer	Possible fault cause	Possible effects	Fault elimination
Undefined switch position	♦ Defective CCS switch -E45- ♦ Wiring open or short circuit	♦ Cruise control system switched off	– Check cruise control system ⇒ page 187

Output on the fault reader -V.A.G 1551- printer	Possible fault cause	Possible effects	Fault elimination
00741 Brake pedal monitor Implausible signal	♦ Defective brake light switch -F- ♦ Defective brake pedal switch -F47-	♦ Glow period warning lamp flashes ♦ Brake light defective	– Check brake light switch -F- and brake pedal switch -F47- ⇒ page 169
01117 Load signal for alternator terminal DF Implausible signal	♦ Alternator defective ♦ Voltage regulator defective ♦ Wiring open circuit	♦ Engine preheating not functioning	– Check alternator ⇒ Current flow diagrams, Electrical fault finding and Fitting locations
01193 Low heat output relay -J359- Short to positive	♦ Wiring open circuit ♦ Short to positive ♦ Low heat output relay -J359- defective	♦ Engine preheating not functioning	– Check low heat output relay -J359- ⇒ page 27

Output on the fault reader -V.A.G 1551- printer	Possible fault cause	Possible effects	Fault elimination
01194 High heat output relay -J360- Short to positive	♦ Wiring open circuit ♦ Short to positive ♦ High heat output relay -J360- defective	♦ Engine preheating not functioning	– Check high heat output relay -J360- ⇒ page 27
01282 Variable intake manifold flap change-over valve -N239-			

Protected by copyright. Copying for private or commercial purposes, in part or in whole, is not permitted unless authorised by Volkswagen AG. Volkswagen AG does not guarantee or accept any liability with respect to the correctness of information in this document. Copyright by Volkswagen AG.
satelettronica

Output on the fault reader -V.A.G 1551- printer	Possible fault cause	Possible effects	Fault elimination
Open circuit/short to earth	♦ Wiring open circuit ♦ Defective variable intake manifold flap change-over valve -N239-	♦ Harder engine stop jolts	– Check variable intake manifold flap change-over valve -N239- ⇒ page 27
Short to positive	♦ Short to positive		

Protected by copyright. Copying for private or commercial purposes, in part or in whole, is not permitted unless authorised by Volkswagen AG. Volkswagen AG does not guarantee or accept any liability with respect to the correctness of information in this document. Copyright by Volkswagen AG.

satelettronica

4 Fault table: Fault codes 16485...18076

Note

A new fault code listing has been introduced and positioned where the well known five digit V.A.G fault was listed previously, the possible causes are described in greater detail with the new codes. The fault text has not changed greatly. In addition a new type of fault code, the so called P codes e.g. P0101, is listed and positioned next to the existing codes. These P codes have no significance at present, but will be required by self-diagnosis systems in the future.

Note

17664 P1256…030 coolant temperature sender -G62- open circuit/short to positive sporadic fault

Note

- *17664 = Fault code*
- *P1256 = Additional fault code*
- *030 = Fault type as number*
- *Coolant temperature sender -G62- = faulty current path or fault location*
- *Open circuit/short to positive = fault type as text*
- *Sporadic faults = Faults that are not always present e.g. loose contact*

Output on the fault reader -V.A.G 1551- printer	Possible fault cause	Possible effects	Fault elimination
16485 P0101 Air mass meter -G70- Implausible signal	♦ Defective air mass meter -G70- ♦ Wiring open circuit/ short to earth	♦ Reduced performance ♦ Black smoke	– Check air mass meter -G70- ⇒ page 175
16685 P0301 Misfiring recognised No. 1 Cyl.	♦ No combustion in No. 1 Cyl. ♦ No compression pressure	♦ Reduced performance ♦ Engine runs rough ♦ Increased exhaust emissions	– Checking compression ⇒ page 87

satelettronica

Output on the fault reader -V.A.G 1551- printer	Possible fault cause	Possible effects	Fault elimination
16686 P0302 Misfiring recognised No. 2 Cyl.	♦ No combustion in No. 2 Cyl. ♦ No compression pressure	♦ Reduced performance ♦ Engine runs rough ♦ Increased exhaust emissions	– Checking compression ⇒ page 87
16687 P0303 Misfiring recognised No. 3 Cyl.	♦ No combustion in No. 3 Cyl. ♦ No compression pressure	♦ Reduced performance ♦ Engine runs rough ♦ Increased exhaust emissions	– Checking compression ⇒ page 87

Output on the fault reader -V.A.G 1551- printer	Possible fault cause	Possible effects	Fault elimination
16705 P0321 Engine speed sender -G28- Implausible signal	♦ Defective engine speed sender -G28- ♦ Wiring open or short circuit ♦ Gap speed sender/ sender wheel too large ♦ Metal swarf on engine speed sender -G28- ♦ Engine speed sender -G28- loose	♦ Engine stalls ♦ Engine runs rough ♦ Glow period warning lamp flashes ♦ Increased exhaust emissions ♦ Rev. counter no display	– Check engine speed sender -G28- ⇒ page 164
16706 P0322 Engine speed sender -G28- No signal	♦ Defective engine speed sender -G28- ♦ Wiring open or short circuit	♦ Engine will not start ♦ Engine stalls ♦ Glow period warning lamp flashes ♦ Rev. counter no display	– Check engine speed sender -G28- ⇒ page 164

Output on the fault reader -V.A.G 1551- printer	Possible fault cause	Possible effects	Fault elimination
16725 P0341 Camshaft position sender			

Protected by copyright. Copying for private or commercial purposes, in part or in whole, is not permitted unless authorised by Volkswagen AG. Volkswagen AG does not guarantee or accept any liability with respect to the correctness of information in this document. Copyright by Volkswagen AG.

sateltronica

Output on the fault reader -V.A.G 1551- printer	Possible fault cause	Possible effects	Fault elimination
Implausible signal	♦ Hall sender -G40- defective ♦ Hall sender -G40- incorrect or incorrectly secured ♦ Gap dimension between Hall sender -G40- and camshaft toothed belt pulley not OK. ♦ Wiring open circuit/ short to earth	♦ Time to start engine has increased	– Check Hall sender -G40- ⇒ page 181
	♦ Hub with sender wheel on camshaft is twisted or loose	♦ Engine will not start ♦ Engine stalls	– Check positions of camshaft and sender wheel ⇒ page 79

Output on the fault reader -V.A.G 1551- printer	Possible fault cause	Possible effects	Fault elimination
16885 P0501 Vehicle speed signal Implausible signal	♦ No signal from speedometer sender -G22-	♦ Speedometer display not OK ♦ Cruise control system switched off ♦ Vehicle jerks when changing gear ♦ Air conditioner is switched off	– Check signal from speedometer sender -G22- ⇒ page 183
16944 P0560 Voltage supply Implausible signal	♦ Terminal 30 voltage supply relay -J317- defective ♦ Relay sticks (sporadically)	♦ Engine will not start ♦ Various running problems including engine will not start	– Check voltage supply for diesel direct injection system control unit -J248- ⇒ page 164

Output on the fault reader -V.A.G 1551- printer	Possible fault cause	Possible effects	Fault elimination
16946 P0562 Voltage supply Voltage too low	♦ Voltage supply less than 4 V	♦ Engine will not start ♦ Various running problems including engine will not start	– Check voltage supply for diesel direct injection system control unit -J248- ⇒ page 164
16947 P0563			

satelettronica

Output on the fault reader -V.A.G 1551- printer	Possible fault cause	Possible effects	Fault elimination
Voltage supply Voltage too great	♦ Voltage supply more than 20 V		
16989 P0605 Control unit defective	♦ Internal defect in diesel direct injection system control unit -J248-	♦ Various running problems ♦ Engine stops	– Renew diesel direct injection system control unit -J248- ⇒ page 191

Output on the fault reader -V.A.G 1551- printer	Possible fault cause	Possible effects	Fault elimination
17552 P1144 Air mass meter -G70- Open circuit/short to earth	♦ Defective air mass meter -G70- ♦ Wiring open circuit/ short to earth	♦ Reduced performance ♦ Black smoke	– Check air mass meter -G70- ⇒ page 175
17553 P1145 Air mass meter -G70- Short to positive	♦ Defective air mass meter -G70- ♦ Wiring open circuit or short to positive	♦ Reduced performance ♦ Black smoke	– Check air mass meter -G70- ⇒ page 175
17554 P1146 Air mass meter -G70- Supply voltage	♦ Operating voltage too high or too low ♦ Wiring open circuit	♦ Reduced performance ♦ Black smoke	– Check air mass meter -G70- ⇒ page 175

Output on the fault reader -V.A.G 1551- printer	Possible fault cause	Possible effects	Fault elimination
17563 P1155 Intake manifold pressure sender -G71- Short to positive	♦ Short to positive ♦ Defective intake manifold pressure sender -G71-	♦ Reduced performance	– Check intake manifold pressure sender -G71- ⇒ page 165
17564 P1156 Intake manifold pressure sender -G71-			

Protected by copyright. Copying for private or commercial purposes, in part or in whole, is not permitted unless authorised by Volkswagen AG. Volkswagen AG does not guarantee or accept any liability with respect to the correctness of information in this document. Copyright by Volkswagen AG.
satelettronica

Output on the fault reader -V.A.G 1551- printer	Possible fault cause	Possible effects	Fault elimination
Open circuit/short to earth	♦ Defective intake manifold pressure sender -G71- ♦ Wiring open circuit/ short to earth	♦ Reduced performance ♦ Increased exhaust emissions	– Check intake manifold pressure sender -G71- ⇒ page 165
17565 P1157 Intake manifold pressure sender -G71- Supply voltage	♦ Defective intake manifold pressure sender -G71- ♦ Wiring open or short circuit	♦ Reduced performance ♦ Increased exhaust emissions	– Check intake manifold pressure sender -G71- ⇒ page 165

Output on the fault reader -V.A.G 1551- printer	Possible fault cause	Possible effects	Fault elimination
17568 P1160 Intake manifold temperature sender -G72- Short to earth	♦ Defective intake manifold temperature sender -G72- ♦ Wiring short to earth	♦ Goes to preset value of 135.9 °C ♦ Engine preheating not functioning	– Check intake manifold temperature sender -G72- ⇒ page 172
17569 P1161 Intake manifold temperature sender -G72- Open circuit/short to positive	♦ Defective intake manifold temperature sender -G72- ♦ Wiring open circuit or short to positive	♦ Goes to preset value of 135.9 °C ♦ Engine preheating not functioning	– Check intake manifold temperature sender -G72- ⇒ page 172

Output on the fault reader -V.A.G 1551- printer	Possible fault cause	Possible effects	Fault elimination
17570 P1162 Fuel temperature sender -G81- Short to earth	♦ Fuel temperature sender -G81- defective ♦ Wiring short to earth	♦ Increased exhaust emissions	– Check fuel temperature sender -G81- ⇒ page 173
17571 P1163 Fuel temperature sender -G81-			

Protected by copyright. Copyright by Volkswagen AG. Volkswagen AG does not guarantee or accept any liability with respect to the correctness of information in this document. Copyright by Volkswagen AG. Protected by copyright. Copying for private or commercial purposes, in part or in whole, is not permitted unless authorised by Volkswagen AG.
satelettronica

Output on the fault reader -V.A.G 1551- printer	Possible fault cause	Possible effects	Fault elimination
Open circuit/short to positive	♦ Fuel temperature sender -G81- defective ♦ Wiring open circuit or short to positive	♦ Increased exhaust emissions	– Check fuel temperature sender -G81- ⇒ page 173

Output on the fault reader -V.A.G 1551- printer	Possible fault cause	Possible effects	Fault elimination
17663 P1255 Coolant temperature sender -G62- Short to earth	♦ Coolant temperature sender -G62- defective ♦ Wiring short to earth	♦ Black smoke when starting ♦ Glow period is always approx. 20 seconds ♦ Engine preheating not functioning	– Check coolant temperature sender -G62- ⇒ page 168
17664 P1256 Coolant temperature sender -G62- Open circuit/short to positive	♦ Coolant temperature sender -G62- defective ♦ Wiring open circuit or wiring short to positive	♦ Black smoke when starting ♦ Glow period is always approx. 20 seconds ♦ Engine preheating not functioning	– Check coolant temperature sender -G62- ⇒ page 168

Output on the fault reader -V.A.G 1551- printer	Possible fault cause	Possible effects	Fault elimination
17668 P1260 Unit injector solenoid valve, No. 1 cyl. -N240- Implausible signal	♦ Unit injector valve, No. 1 cyl. -N240- cannot be controlled	♦ Various running problems ♦ Engine runs rough ♦ Reduced performance ♦ Increased exhaust emissions	– Check unit injector valves ⇒ page 178
17669 P1261 Unit injector solenoid valve, No. 1 cyl. -N240-			

Copyright by Volkswagen AG. Volkswagen AG does not guarantee or accept any liability with respect to the correctness of information in this document. Copyright by Volkswagen AG. Protected by copyright. Copying for private or commercial purposes, in part or in whole, is not permitted unless authorised by Volkswagen AG.
satelettronica

Protected copyright. Copying for private or commercial purposes, in part or in whole, is not permitted unless authorised by Volkswagen AG. Volkswagen AG does not guarantee or accept any liability with respect to the correctness of information in this document. Copyright by Volkswagen AG.

Output on the fault reader -V.A.G 1551- printer	Possible fault cause	Possible effects	Fault elimination
Control limit exceeded	♦ Control period too long ♦ Transfer resistance	♦ Various running problems ♦ Engine runs rough ♦ Reduced performance ♦ Increased exhaust emissions	– Check unit injector valves ⇒ page 178

Output on the fault reader -V.A.G 1551- printer	Possible fault cause	Possible effects	Fault elimination
17670 P1262 Unit injector solenoid valve, No. 1 cyl. -N240- Control limit not reached	♦ Control period too short ♦ Shortage of fuel ♦ Air in fuel system	♦ Various running problems ♦ Engine runs rough ♦ Reduced performance ♦ Increased exhaust emissions	– Check unit injector valves ⇒ page 178 – Check fuel supply system ⇒ page 124
17671 P1263 Unit injector solenoid valve, No. 2 cyl. -N241- Implausible signal	♦ Unit injector valve, No. 2 cyl. -N241- cannot be controlled	♦ Various running problems ♦ Engine runs rough ♦ Reduced performance ♦ Increased exhaust emissions	– Check unit injector valves ⇒ page 178

Output on the fault reader -V.A.G 1551- printer	Possible fault cause	Possible effects	Fault elimination
17672 P1264 Unit injector solenoid valve, No. 2 cyl. -N241- Control limit exceeded	♦ Control period too long ♦ Transfer resistance	♦ Various running problems ♦ Engine runs rough ♦ Reduced performance ♦ Increased exhaust emissions	– Check unit injector valves ⇒ page 178
17673 P1265			

satelettronica

Output on the fault reader -V.A.G 1551- printer	Possible fault cause	Possible effects	Fault elimination
Unit injector solenoid valve, No. 2 cyl. -N241- Control limit not reached	♦ Control period too short ♦ Shortage of fuel ♦ Air in fuel system	♦ Various running problems ♦ Engine runs rough ♦ Reduced performance ♦ Increased exhaust emissions	– Check unit injector valves ⇒ page 178 – Check fuel supply system ⇒ page 124

Output on the fault reader -V.A.G 1551- printer	Possible fault cause	Possible effects	Fault elimination
17674 P1266 Unit injector solenoid valve, No. 3 cyl. -N242- Implausible signal	♦ Unit injector valve, No. 3 cyl. -N242- cannot be controlled	♦ Various running problems ♦ Engine runs rough ♦ Reduced performance ♦ Increased exhaust emissions	– Check unit injector valves ⇒ page 178
17675 P1267 Unit injector solenoid valve, No. 3 cyl. -N242- Control limit exceeded	♦ Control period too long ♦ Transfer resistance	♦ Various running problems ♦ Engine runs rough ♦ Reduced performance ♦ Increased exhaust emissions	– Check unit injector valves ⇒ page 178

Output on the fault reader -V.A.G 1551- printer	Possible fault cause	Possible effects	Fault elimination
17676 P1268 Unit injector solenoid valve, No. 3 cyl. -N242-			

Volkswagen AG does not guarantee or accept any liability with respect to the correctness of information in this document. Copyright by Volkswagen AG.
Protected by copyright. Copying for private or commercial purposes, in part or in whole, is not permitted unless authorised by Volkswagen AG.
satelettronica

Output on the fault reader -V.A.G 1551- printer	Possible fault cause	Possible effects	Fault elimination
Control limit not reached	♦ Control period too short ♦ Shortage of fuel ♦ Air in fuel system	♦ Various running problems ♦ Engine runs rough ♦ Reduced performance ♦ Increased exhaust emissions	– Check unit injector valves ⇒ page 178 – Check fuel supply system ⇒ page 124
17795 P1387 Control unit defective	♦ Internal defect in diesel direct injection system control unit -J248-	♦ Various running problems ♦ Engine stops	– Renew diesel direct injection system control unit -J248- ⇒ page 191
17810 P1402 Exhaust gas recirculation valve -N18- Short to positive	♦ Short to positive	♦ No exhaust gas recirculation	– Check exhaust gas recirculation valve -N18- ⇒ page 27

Output on the fault reader -V.A.G 1551- printer	Possible fault cause	Possible effects	Fault elimination
17849 P1441 Exhaust gas recirculation valve -N18- Open circuit/short to earth	♦ Wiring open circuit ♦ Exhaust gas recirculation valve -N18- defective	♦ No exhaust gas recirculation	– Check exhaust gas recirculation valve -N18- ⇒ page 27
	♦ Short to earth	♦ Too much exhaust gas recirculation ♦ Reduced performance ♦ Black smoke	
17948 P1540 Vehicle speed signal Signal too large	♦ Road speed more than 260 km/h ♦ Dash panel insert defective	♦ Speedometer display not OK ♦ Cruise control system switched off ♦ Vehicle jerks when changing gear ♦ Air conditioner is switched off	– Check signal from speedometer sender -G22- ⇒ page 183

Copyright by Volkswagen AG. Volkswagen AG does not guarantee or accept any liability with respect to the correctness of information in this document. Copying for private or commercial purposes, in part or in whole, is not permitted unless authorised by Volkswagen AG. Protected by copyright.
satelettronica

Output on the fault reader -V.A.G 1551- printer	Possible fault cause	Possible effects	Fault elimination
17954 P1546 Charge pressure control solenoid valve -N75- Short to positive	♦ Short to positive	♦ Reduced performance ♦ Charge pressure too low	– Check charge pressure control solenoid valve -N75- ⇒ page 27 .
17957 P1549 Charge pressure control solenoid valve -N75- Open circuit/short to earth	♦ Wiring open circuit ♦ Defective charge pressure control solenoid valve -N75-	♦ Reduced performance ♦ Charge pressure too low	– Check charge pressure control solenoid valve -N75- ⇒ page 27 .
	♦ Short to earth	♦ Reduced performance ♦ Charge pressure too high	

Output on the fault reader -V.A.G 1551- printer	Possible fault cause	Possible effects	Fault elimination
17958 P1550 Charge pressure Control difference	♦ Defective charge pressure control solenoid valve -N75- ♦ Hose connections interchanged, not connected ♦ Leaks between turbocharger and engine (charge air routing) ♦ Turbocharger defective	♦ Reduced performance	– Check charge pressure control solenoid valve -N75- ⇒ page 27 . – Checking charge pressure control ⇒ page 148
17978 P1570			

satelettronica
Protected by copyright. Copying for private or commercial purposes, in part or in whole, is not permitted unless authorised by Volkswagen AG. Volkswagen AG does not guarantee or accept any liability with respect to the correctness of information in this document. Copyright by Volkswagen AG.

Output on the fault reader -V.A.G 1551- printer	Possible fault cause	Possible effects	Fault elimination
Engine control unit locked	♦ Start attempted with a non-authorised key. ♦ Attempted manipulation ♦ Short circuit in communication wire ♦ Fault in system for immobilizer ♦ Immobilizer control unit defective/missing ♦ Diesel direct injection system control unit -J248- renewed but has not been adapted to immobilizer.	♦ Engine starts briefly and then stops again ♦ Glow period warning lamp flashes	– Adapt engine control unit to electronic immobilizer ⇒ page 192 . – Check electronic immobilizer

Output on the fault reader -V.A.G 1551- printer	Possible fault cause	Possible effects	Fault elimination
18008 P1600 Voltage supply terminal 15 Voltage too low	♦ No current supply when ignition is on (terminal 15)	♦ Various running problems including engine will not start	– Check voltage supply for terminal 15 ⇒ Current flow diagrams, Electrical fault finding and Fitting locations
18020 P1612 Engine control unit incorrectly coded	♦ Invalid control unit coding	♦ Glow period warning lamp flashes	– Code control unit ⇒ page 191

Output on the fault reader -V.A.G 1551- printer	Possible fault cause	Possible effects	Fault elimination
18024 P1616 Glow period warning lamp -K29- Short to positive	♦ Short to positive	♦ Glow period warning lamp not functioning	– Check glow period warning lamp -K29- ⇒ page 27
18025 P1617 Glow period warning lamp -K29- Open circuit/short to earth	♦ Wiring open circuit ♦ Bulb defective	♦ Glow period warning lamp not functioning	– Check glow period warning lamp -K29- ⇒ page 27

Protected by copyright. Copying for private or commercial purposes, in part or in whole, is not permitted unless authorised by Volkswagen AG. Volkswagen AG does not guarantee or accept any liability with respect to the correctness of information in this document. Copyright by Volkswagen AG.

satelettronica

Output on the fault reader -V.A.G 1551- printer	Possible fault cause	Possible effects	Fault elimination
	♦ Short to earth	♦ Glow period warning lamp permanently on	

Output on the fault reader -V.A.G 1551- printer	Possible fault cause	Possible effects	Fault elimination
18026 P1618 Glow plug relay -J52- Short to positive	♦ Wire short to positive ♦ Defective glow plug relay -J52-	♦ No glow period ♦ Poor cold starting ♦ Glow period warning lamp -K29- flashes	– Check glow plug relay -J52- ⇒ page 27
18027 P1619 Glow plug relay -J52- Open circuit/short to earth	♦ Wiring open circuit/ short to earth ♦ Defective glow plug relay -J52-	♦ No glow period ♦ Poor cold starting ♦ Glow period warning lamp -K29- flashes	– Check glow plug relay -J52- ⇒ page 27
18034 P1626 Power train data bus No message from gearbox CU	♦ Fault in data wire to gearbox control unit	♦ Various running problems (gear change jolts, load change jolts)	– Check data bus ⇒ page 189

Output on the fault reader -V.A.G 1551- printer	Possible fault cause	Possible effects	Fault elimination
18039 P1631 Accelerator position sender -G79- Signal too large	♦ Defective accelerator position sender -G79-	♦ Increased idling speed	– Check accelerator position sender -G79- ⇒ page 133
18040 P1632 Accelerator position sender -G79- Supply voltage	♦ Operating voltage too high or too low ♦ Wiring open circuit	♦ Glow period warning lamp flashes ♦ Increased idling speed	– Check accelerator position sender -G79- ⇒ page 133

Output on the fault reader -V.A.G 1551- printer	Possible fault cause	Possible effects	Fault elimination
18047 P1639			

Protected by copyright. Copying for private or commercial purposes, in part or in whole, is not permitted unless authorised by Volkswagen AG. Volkswagen AG does not guarantee or accept any liability with respect to the correctness of information in this document. Copyright by Volkswagen AG.

satelettronica

Output on the fault reader -V.A.G 1551- printer	Possible fault cause	Possible effects	Fault elimination
Accelerator position sender -G79- with accelerator position sender 2 -G185- Implausible signal	♦ Defective accelerator position sender -G79-	♦ Increased idling speed	– Check accelerator position sender -G79- ⇒ page 133
18048 P1640 Control unit defective	♦ Internal defect in diesel direct injection system control unit -J248-	♦ Various running problems ♦ Engine stops	– Renew diesel direct injection system control unit -J248- ⇒ page 191

Output on the fault reader -V.A.G 1551- printer	Possible fault cause	Possible effects	Fault elimination
18056 P1648 Power train data bus Defective	♦ Fault in data wiring to gearbox or ABS control unit ♦ Fault in system: Automatic gearbox or ABS	♦ Various running problems (gear change jolts, load change jolts)	– Check data bus ⇒ page 189
18057 P1649 Power train data bus No message from ABS CU	♦ Fault in data wire to ABS control unit	♦ Various running problems (gear change jolts, load change jolts)	– Check data bus ⇒ page 189

Output on the fault reader -V.A.G 1551- printer	Possible fault cause	Possible effects	Fault elimination
18071 P1663 Unit injector valve activation Short to positive	♦ Short to positive in engine wiring harness ♦ Internal short circuit to positive in engine control unit	♦ Engine stops (continuous fault) ♦ Engine misfiring (sporadic fault)	– Check unit injector valves ⇒ page 178
18072 P1664 Unit injector valve activation Electrical fault in current circuit	♦ Wiring open circuit or short circuit to earth in engine wiring harness	♦ Engine stops (continuous fault) ♦ Engine misfiring (sporadic fault)	– Check unit injector valves ⇒ page 178
18073 P1665			

Protected by copyright. Copyright © Volkswagen AG. Volkswagen AG does not guarantee or accept any liability with respect to the correctness of information in this document. Copying for private or commercial purposes, in part or in whole, is not permitted unless authorised by Volkswagen AG.
satelettronica

Output on the fault reader -V.A.G 1551- printer	Possible fault cause	Possible effects	Fault elimination
Unit injector valve activation Mechanical fault	◆ Unit injector defective mechanically	◆ Engine misfiring ◆ Engine stalls	– Renew unit injector ⇒ page 159

Output on the fault reader -V.A.G 1551- printer	Possible fault cause	Possible effects	Fault elimination
18074 P1666 Unit injector solenoid valve, No. 1 cyl. - N240- Electrical fault in current circuit	◆ Wiring open circuit or short circuit to earth in engine wiring harness	◆ Various running problems ◆ Engine runs rough ◆ Reduced performance ◆ Increased exhaust emissions	– Check unit injector valves ⇒ page 178
18075 P1667 Unit injector solenoid valve, No. 2 cyl. - N241- Electrical fault in current circuit			
18076 P1668 Unit injector solenoid valve, No. 3 cyl. - N242- Electrical fault in current circuit	◆ Wiring open circuit or short circuit to earth in engine wiring harness	◆ Various running problems ◆ Engine runs rough ◆ Reduced performance ◆ Increased exhaust emissions	– Check unit injector valves ⇒ page 178

Volkswagen AG. Volkswagen AG does not guarantee or accept any liability with respect to the correctness of information in this document. Copyright by Volkswagen AG. Protected by copyright. Copying for private or commercial purposes, in part or in whole, is not permitted unless authorised.

satelettronica

5 Final control diagnosis

5.1 Performing final control diagnosis

Special tools and workshop equipment required

- ♦ Fault reader -V.A.G 1551-
- ♦ Diagnosis lead -V.A.G 1551/3C-

Test requirements for vehicles with air conditioning system

- Vehicle at room temperature (warmer than + 15 °C)
- Air conditioning system switched on
- Select lowest temperature and highest blower speed

The final control diagnosis activates the following components in the stated sequence:

1 - Exhaust gas recirculation valve -N18-

2 - Conditioner compressor interruption

3 - Charge pressure control solenoid valve -N75-

4 - Variable intake manifold flap change-over valve -N239-

5 - Glow period warning lamp -K29-

6 - Glow plug relay -J52-

7 - Low heat output relay -J359-

8 - High heat output relay -J360-

Note

- ♦ *Activation of individual control elements is limited to 30 secs. but can be stopped at any time by pressing the [→] button.*
- ♦ *The ignition must be switched off before repeating the final control diagnosis.*

Procedure

– Connect fault reader -V.A.G 1551- and select engine electronics control unit with “address word 01”. Engine must be idling. (Connecting fault reader and selecting engine electronics control unit ⇒ page 3 .)

Indicated on display:

```
Rapid data transfer                HELP
Select function XX
```

– Operate fault reader taking into account the information on the display:

– Press buttons [0] and [3] for function “final control diagnosis”.

Indicated on display:

```
Rapid data transfer                   Q
03-Final control diagnosis
```

– Confirm entry with [Q] button.

Indicated on display:

```
Final control diagnosis              ->
Exhaust gas recirculation valve N18
```

The valve must click.

Protected by copyright. Copying for private or commercial purposes, in part or in whole, is not permitted unless authorised by Volkswagen AG. Volkswagen AG does not guarantee or accept any liability with respect to the correctness of information in this document. Copyright by Volkswagen AG.
satelettronica

Protected by copyright. Copying for private or commercial purposes, in part or in whole, is not permitted unless authorised by Volkswagen AG. Volkswagen AG does not guarantee or accept any liability with respect to the correctness of information in this document. Copyright by Volkswagen AG.

Note

The valve clicking cannot be heard because of engine noises and can therefore only be felt by touch.

If the valve does not click:

– Check exhaust gas recirculation system ⇒ page 198

– Press the ⇨ button.

Indicated on display:

```
Final control diagnosis                    ->
Conditioner compressor interruption
```

Air conditioner compressor switch-off is checked.

The test step is also recalled on vehicles without air conditioner system.

The air conditioner compressor must stop within 5 seconds (visual check) then start approx. every 5 seconds and then stop again.

If the conditioner compressor is not switched off:

– Check signals from/to air conditioning system ⇒ page 184

– Press the ⇨ button.

Indicated on display:

```
Final control diagnosis                    ->
Charge pressure control solenoid valve N
75
```

Charge pressure control solenoid valve -N75- must click.

Note

The clicking of the valve is difficult to hear and is therefore best checked by touch.

If the charge pressure control solenoid valve -N75- does not click:

– Check charge pressure control solenoid valve -N75- ⇒ page 148 .

– Press the ⇨ button.

Indicated on display:

```
Final control diagnosis                    ->
Var. intake manif. flap change-
over valve N239
```

The engine must stop.

If the engine does not stop:

– Check intake manifold flap changeover ⇒ page 177

– Press the ⇨ button.

Indicated on display:

```
Final control diagnosis                    ->
Glow period warning lamp K29
```

Glow period warning lamp -K29- must flash.

If glow period warning lamp -K29- does not flash:

– Check glow period warning lamp -K29- : ⇒ Current flow diagrams, Electrical fault finding and Fitting locations

– Press the ⇨ button.

Indicated on display:

```
Final control diagnosis                    ->
Glow plug relay J52
```

satelettronica

Glow plug relay -J52- must click.

If the glow plug relay -J52- does not click:

– Check glow plug relay -J52- ⇒ Current flow diagrams, Electrical fault finding and Fitting locations

– Press the ⇒ button.

Indicated on display:

```
Final control diagnosis                    ->
Low heat output relay J359
```

The Low heat output relay -J359- must click.

If low heat output relay -J359- does not click:

– Check low heat output relay -J359- ⇒ Current flow diagrams, Electrical fault finding and Fitting locations.

– Press the ⇒ button.

Indicated on display:

```
Final control diagnosis                    ->
High heat output relay J360
```

The high heat output relay -J360- must click.

Switching on and off the relay can also be observed as the interior light becomes brighter and darker as a result of the glow plug high power consumption.

If high heat output relay -J360- does not click:

– Check high heat output relay -J360- ⇒ Current flow diagrams, Electrical fault finding and Fitting locations.

– Press the ⇒ button.

Indicated on display:

```
Rapid data transfer                        HELP
Select function XX
```

– Press buttons 0 and 6 for function “End output” and confirm entry with Q button.

– Switch off ignition.

Now the final control test is concluded.

Protected by copyright. Copying for private or commercial purposes, in part or in whole, is not permitted unless authorised by Volkswagen AG. Volkswagen AG does not guarantee or accept any liability with respect to the correctness of information in this document. Copyright by Volkswagen AG.

satelettronica

6 Measured value blocks

6.1 Safety precautions

Observe following if test and measuring instruments are required during a road test:

- ♦ Test and measuring instruments must be secured to rear seat and operated by a second person from this location.

If test and measuring instruments are operated from front passenger seat and the vehicle is involved in an accident, there is a possibility that the person sitting in this seat may receive serious injuries when the airbag is triggered.

6.2 Reading measured value block

Special tools and workshop equipment required

- ♦ Fault reader -V.A.G 1551-
- ♦ Diagnosis lead -V.A.G 1551/3C-

Test prerequisites

- Coolant temperature must be at least 80 °C.
- All electrical consumers, e.g. rear window heating, must be switched off.
- If the vehicle is equipped with an air conditioner, it must be switched off.
- No faults must be stored in fault memory ⇒ page 7 .

Procedure

– Connect fault reader -V.A.G 1551- and select engine electronics control unit with “address word 01”. Engine must be idling. (Connecting fault reader and selecting engine electronics control unit ⇒ page 3.)

Indicated on display:

```
Rapid data transfer                    HELP
Select function XX
```

– Press buttons 0 and 8 for function “Read measured value block” and confirm entry with Q button.

Indicated on display:

```
Reading measured value block
Input display group number XXX
```

Note

The display group number 001 is an example to illustrate the sequence.

– Press buttons 0, 0 and 1 for “display group number 1” and confirm entry with Q button.

Indicated on display: (1...4 = display zones)

```
Read measured value block 1            -
         1         2         3         4
```

– Press the → button.

Indicated on display:

```
Rapid data transfer                    HELP
Select function XX
```

– Press buttons 0 and 6 for function “End output” and confirm entry with Q button.

Protected by copyright. Copying for private or commercial purposes, in part or in whole, is not permitted unless authorised by Volkswagen AG. Volkswagen AG does not guarantee or accept any liability with respect to the correctness of information in this document. Copyright by Volkswagen AG.
satelettronica

Note

To change to another display group proceed as follows:

Display group	Fault reader -V.A.G 1551-
Higher	Press button 3
Lower	Press button 1
Skip	Press C button.

6.3 Measured values at idling speed

Display group 000 (decimal displayed value)			
• Engine running at idling speed			
Read measured value block 0 (x x x x x x x x x x; 1 2 3 4 5 6 7 8 9 10) — Appears on display: Display zones	Specification	Corresponds to	
Air mass[5]	60...96	200...320 mg/H	
Fuel temperature	85…178	20…85 °C	
Intake manifold temperature	190…51	5…100 °C	
Coolant temperature	80…36	80…110 °C	
Atmospheric pressure	181…222	900...1100 mbar	
Intake manifold pressure	88…108	900...1100 mbar	
Quantity injected	11…33	3.0…9.0 mg/ stroke	
Accelerator pedal position	0	0 %	
Start of delivery	117…97	3°…9° BTDC	
Engine speed	41…45	860...940 rm	

5) The measured values are only valid when the exhaust gas recirculation is switched on. When the engine is idling the exhaust gas recirculation is switched off after running for a predetermined period, if necessary give burst on throttle or restart engine.

6.3.1 Display group 001 at idling speed (engine warm, coolant temperature not below 80 °C)

Display group 001 -injected quantity-						
Read measured value block 1 → (xxxx rpm; xx.x mg/ H; xx.x° CA; xxx.x °C) — Appears on display: Display zones					Specification	Evaluation
Coolant temperature					80…110 °C	---
Injection period (specified)					4…7° CA	---
Quantity injected					3.0…9.0 mg/H	⇒ page 32
Engine speed					860...940 rpm	---

Protected by copyright. Copying for private or commercial purposes, in part or in whole, is not permitted unless authorised by Volkswagen AG. Volkswagen AG does not guarantee or accept any liability with respect to the correctness of information in this document. Copyright by Volkswagen AG.
satelettronica

6.3.2 Evaluation: Injected quantity display

Display fault reader -V.A.G 1551-	Possible fault cause	Fault elimination
Below 3.0 mg/H	♦ Unit injectors defective	– Renew unit injectors ⇒ page 159
Above 9.0 mg/H	♦ Engine too cold ♦ Shortage of fuel ♦ Air in fuel system ♦ Unit injectors defective	– Run engine at increased speed to warm up and repeat check – Check fuel supply system ⇒ page 124 – Renew unit injectors ⇒ page 159

6.3.3 Display group 002 at idling speed (engine warm, coolant temperature not below 80 °C)

Display group 002 -idling speed-						
Read measured value block 2 →				Appears on display		
xxxx rpm	xxx.x %	xxx	xxx.x °C			
1	2	3	4	Display zones	Specification	Evaluation
				Coolant temperature	80…110 °C	---
				Operating condition	010	⇒ page 32
				Accelerator pedal position	0 %	⇒ page 32
				Engine speed	860...940 rpm	---

6.3.4 Evaluation: Accelerator pedal position display

Display fault reader -V.A.G 1551-	Possible fault cause	Fault elimination
1…100 %	♦ Defective accelerator position sender -G79-	– Check accelerator position sender -G79- ⇒ page 130
	♦ Open circuit to accelerator position sender -G79-	

6.3.5 Evaluation: Operating condition display

Significance of figures in 3-digit number block for engine operating condition:

Significance if display = 1			
x	x	x	Engine operating condition
		1	Air conditioner compressor switched on
	1		Idling switch closed
1			Increased idling speed because air conditioner is switched on

satelettronica

6.3.6 Display group 003 at idling speed (engine warm, coolant temperature not below 80 °C)

Display group 003 -Exhaust gas recirculation[6)]-						
Read measured value block 3 →				Appears on display		
xxxx rpm	xxx mg/H	xxx mg/H	xxx %			
1	2	3	4	Display zones	Specification	Evaluation
				Duty cycle from exhaust gas recirculation valve	30…80 %	---
			Mass of air drawn in (actual)		200…320 mg/H	⇒ page 33
		Mass of air drawn in (specified)			220…300 mg/H	⇒ page 33
	Engine speed				860...940 rpm	---

6) The measured values are only valid when the exhaust gas recirculation is switched on. When the engine is idling the exhaust gas recirculation is switched off after running for a predetermined period, if necessary give burst on throttle or restart engine.

6.3.7 Evaluation: Air mass drawn in (specified) display

Display fault reader -V.A.G 1551-	Possible fault cause	Fault elimination
Above 300 mg/H	♦ Engine too cold	– Run engine at increased speed to warm up and repeat check.

6.3.8 Evaluation: Air mass drawn in (actual) display

Display fault reader -V.A.G 1551-	Possible fault cause	Fault elimination
Below 200 mg/H	♦ Excessive exhaust gas recirculation	– Check exhaust gas recirculation ⇒ page 198
	♦ Unmetered air	– Check intake air system for leaks.
Above 320 mg/H	♦ Engine too cold	– Run engine at increased speed to warm up and repeat check.
	♦ Insufficient exhaust gas recirculation	– Engine running for a long time at idling speed, give burst on throttle.
	♦ Defective air mass meter -G70-	– Check air mass meter -G70- ⇒ page 175 – If a fault is present the measured value block indicates a constant air mass value of approx. 539 mg/H over the complete speed and load range.

6.3.9 Display group 004 at idling speed (engine warm, coolant temperature not below 80 °C)

Display group 004 -unit injector valve activation-				
Read measured value block 4 →				Appears on display
xxxx rpm	xx.x ° BTDC	xx.x °CA	xx.x °CA	

Copyright by Volkswagen AG. Volkswagen AG does not guarantee or accept any liability with respect to the correctness of information in this document. Copyright by Volkswagen AG. Protected by copyright. Copying for private or commercial purposes, partly or in whole, is not permitted unless authorised by Volkswagen AG.
satelettronica

Display group 004 -unit injector valve activation-						
1	2	3	4	Display zones	Specification	Evaluation
				Synchronisation angle	-6…+6° CA	⇒ page 34
			Injection period (specified)		4…7° CA	---
		Commencement of injection (specified)			3°…9° BTDC	⇒ page 34
	Engine speed				860...940 rpm	---

6.3.10 Evaluation: Commencement of injection (specified) display

Display fault reader -V.A.G 1551-	Possible fault cause	Fault elimination
Below 3° BTDC	♦ Engine too cold	– Run engine at increased speed to warm up and repeat check.

6.3.11 Evaluation: Synchronisation angle display

Display fault reader -V.A.G 1551-	Possible fault cause	Fault elimination
Earlier than + 6° CA or later than - 6° CA	♦ Hall sender -G40- defective ♦ Hall sender -G40- incorrect or incorrectly secured ♦ Gap dimension between sender and camshaft toothed belt pulley not OK. ♦ Wiring open circuit/short to earth	– Check Hall sender -G40- ⇒ page 181
	♦ Hub with sender wheel on camshaft is twisted or loose	– Check positions of camshaft and sender wheel ⇒ page 79

6.3.12 Display group 005

The values displayed are not relevant for fault finding within the service department.

Display group 005 -starting conditions-						
Read measured value block 5 →				Appears on display		
xxxx rpm	xx.x mg/H	xx.x ° B/ATDC	xxx.x °C			
1	2	3	4	Display zones	Specification	Evaluation
				Coolant temperature	---	---
			Starting synchronisation		---	---
		Starting quantity			---	---
	Engine speed				---	---

6.3.13 Display group 006 at idling

Display group 006 -switch positions-	
Read measured value block 6 →	Appears on display

Protected by copyright. Copying for private or commercial purposes, in part or in whole, is not permitted unless authorised by Volkswagen AG. Volkswagen AG does not guarantee or accept any liability with respect to the correctness of information in this document. Copyright by Volkswagen AG.
satelettronica

Display group 006 -switch positions-						
xxx km/h	xxx	xxx.x %	xxx			
1	2	3	4	Display zones	Specification	Evaluation
				Cruise control system[7]	---	
			Accelerator pedal position		0 %	⇒ page 32
		Switch positions				⇒ page 35
	Speed				---	---

7) 0 = Vehicles with cruise control system, cruise control system switched off 1 = Vehicles with cruise control system, cruise control system switched on 255 = Vehicles without cruise control system

6.3.14 Evaluation: Switch positions display

Significance of figures in 3-digit number block for switch positions:

Significance if display = 1			
x	x	x	Brake pedal monitor
		1	Brake light switch -F- closed
	1		Brake pedal switch -F47- open
1			Clutch pedal switch -F36- open

6.3.15 Display group 007 with ignition switched on (engine cold and not running)

Display group 007 -temperatures-						
Read measured value block 7 →				Appears on display		
xxx.x °C	xxx %	xxx.x °C	xxx.x °C			
1	2	3	4	Display zones	Specification	Evaluation
				Coolant temperature	Approx. ambient temperature[8]	⇒ page 36
			Intake manifold temperature		Approx. ambient temperature[8]	⇒ page 36
		Fuel cooling status			Off: 0 %	---
	Fuel temperature				Approx. ambient temperature[8]	⇒ page 35

8) Details of temperature specifications are not possible. When the engine is cold the fuel, intake air and coolant temperatures must equate approximately to ambient temperature. If a temperature deviates noticeably, then the relevant sender must be checked.

6.3.16 Evaluation: Fuel temperature display

Display fault reader -V.A.G 1551-	Possible fault cause	Fault elimination
-5.4 °C	♦ Short circuit or fuel temperature sender -G81- defective	– Check fuel temperature sender -G81- ⇒ page 173 – If a fault is present the measured value block indicates a fuel temperature of -5.4 °C

Protected by copyright. Copying for private or commercial purposes, in part or in whole, is not permitted unless authorised by Volkswagen AG. Volkswagen AG does not guarantee or accept any liability with respect to the correctness of information in this document. Copyright by Volkswagen AG.
satelettronica

6.3.17 Evaluation: Intake manifold temperature display

Display fault reader -V.A.G 1551-	Possible fault cause	Fault elimination
approx. 135.9 °C	♦ Open circuit or intake manifold temperature sender -G72- defective	– Check intake manifold temperature sender -G72- ⇒ page 172 – If a fault is present the measured value block indicates a constant intake manifold temperature of approx.135.9 °C

6.3.18 Evaluation: Coolant temperature display

Display fault reader -V.A.G 1551-	Possible fault cause	Fault elimination
Large deviation from ambient temperature	♦ Short circuit or coolant temperature sender -G62- defective	– Check coolant temperature sender -G62- ⇒ page 168 – If a fault is present the fuel temperature is alternatively displayed – If the fuel temperature indicator is also defective - 5.4 °C is displayed

6.3.19 Display group 009

The values displayed are not relevant for fault finding within the service department.

Display group 009 -injected quantity limitation-						
Read measured value block 9 →				Appears on display		
xxxx rpm	xx.x mg/H		xx.x mg/H			
1	2	3	4	Display zones	Specification	Evaluation
				Quantity limitation	---	---
					---	---
		Injected quantity (cruise control system active)			---	---
	Engine speed				---	---

6.3.20 Display group 012

The values displayed are not relevant for fault finding within the service department.

Display group 012 -glow plug system-						
Read measured value block 12 →				Appears on display		
xxxxxxxx	xx.xx secs.	xx.x V	xxx.x °C			
1	2	3	4	Display zones	Specification	Evaluation
				Coolant temperature	---	---
			Vehicle voltage		---	---
		Pre-glow period			---	---

Protected by copyright. Copying for private or commercial purposes, in part or in whole, is not permitted unless authorised by Volkswagen AG. Volkswagen AG does not guarantee or accept any liability with respect to the correctness of information in this document. Copyright by Volkswagen AG.
satelettronica

Display group 012 -glow plug system-		
Glow status	---	---

6.3.21 Display group 013 at idling speed (engine warm, coolant temperature not below 80 °C)

Display group 013 -idling speed smooth running control-						
Read measured value block 13 →				Appears on display		
x.xx mg/H	x.xx mg/H	x.xx mg/H				
1	2	3	4	Display zones	Specification	Evaluation
			Cyl. 3 smooth running control injected quantity		-2.8…+2.8 mg/H	⇒ page 37
		Cyl. 2 smooth running control injected quantity			-2.8…+2.8 mg/H	⇒ page 37
	Cyl. 1 smooth running control injected quantity				-2.8…+2.8 mg/H	⇒ page 37

6.3.22 Evaluation: Idling speed smooth running control display

- The injection system is equipped with an idling speed smooth running control. There may be power differences between the individual cylinders (component tolerances, jet drillings, compressions etc.) which are recognised and equalized via selective injected quantities.
- Recognition at idling speed is via the signal from the engine speed sender. If the signals are delivered at the same rhythm then all cylinders work the same. If one cylinder is weaker then the crankshaft takes longer for the next half revolution. Conversely, a more powerful cylinder accelerates the crankshaft so less time is taken.
- If the control unit recognises a difference, then the relevant cylinder is given more or less fuel, until the engine runs “evenly” again.
- +...mg/H: The respective cylinder is less powerful and is therefore supplied with more fuel.
- -...mg/H: The respective cylinder is more powerful and is therefore supplied with less fuel.

6.3.23 Display group 015

The values displayed are not relevant for fault finding within the service department.

Display group 015 -fuel consumption-						
Read measured value block 15 →				Appears on display		
xxxx rpm	xx.x mg/H	xx.xx l/h	xx.x mg/H			
1	2	3	4	Display zones	Specification	Evaluation
				Injection quantity requirement (driver's requirement via accelerator pedal)	---	---
			Fuel consumption		---	---

Protected by copyright. Copying for private or commercial purposes, in part or in whole, is not permitted unless authorised by Volkswagen AG. Volkswagen AG does not guarantee or accept any liability with respect to the correctness of information in this document. Copyright by Volkswagen AG.

satelettronica

Display group 015 -fuel consumption-			
	Injection quantity (actual)	---	---
	Engine speed	---	---

6.3.24 Display group 016 at idling

Display group 016 -additional heater-						
Read measured value block 16 →				Appears on display		
xxx %	xxxxxxxx	xx	xx.x V			
1	2	3	4	Display zones	Specification	Evaluation
				Voltage supply from control unit	---	---
		Heater element activation				⇒ page 38
	Auxiliary heater					⇒ page 38
Alternator loading					---	---

6.3.25 Evaluation: Additional heater display

Significance of figures in 8-digit number block for additional heater:

Significance if display = 1								
x	x	x	x	x	x	x	x	Additional heater switched off, because:
							1	Coolant temperature more than 70 °C...80 °C or intake air temperature more than + 5 °C
						1		Alternator defective
					1			Battery voltage below 9 V
				1				Engine speed below 760 rpm
			1					Engine start within last 10 secs.
		1						Coolant temperature sender -G62- or intake manifold temperature sender -G72- defective or additional heater output stage defective
	1							Ignore
1								Ignore

6.3.26 Evaluation: Heater element activation display

Significance of figures in 2-digit number block for heater element activation:

Significance if display = 1		
x	x	Heater element activation
	1	Low heat output relay -J359- on
1		High heat output relay -J360- on

Protected by copyright. Copying for private or commercial purposes, in part or in whole, is not permitted unless authorised by Volkswagen AG. Volkswagen AG does not guarantee or accept any liability with respect to the correctness of information in this document. Copyright by Volkswagen AG.
satelettronica

6.3.27 Display group 018 at idling speed (engine warm, coolant temperature not below 80 °C)

Display group 018 -unit injector valve status-						
Read measured value block 18 →				Appears on display		
xx	xx	xx				
1	2	3	4	Display zones	Specification	Evaluation
			No. 3 Cyl. unit injector valve		0	⇒ page 39
		No. 2 Cyl. unit injector valve			0	
	No. 1 Cyl. unit injector valve				0	

6.3.28 Evaluation: Unit injector valve display

Display fault reader -V.A.G 1551-	Possible fault cause	Fault elimination
If a number other than 0 is displayed	♦ Unit injector valves defective ♦ Wiring open circuit	– Check unit injector valves ⇒ page 178
	♦ Shortage of fuel ♦ Air in fuel system	– Check fuel supply system ⇒ page 124

6.4 Measured values at full throttle

6.4.1 Display group 000 at full throttle (road test in 3rd gear, coolant temperature not below 80 °C)

Note

- *When testing, accelerate the vehicle at full throttle.*
- *The measured values must be printed out or read (2nd person required) when the revolutions reach 3000 rpm.*

Display group 000 (decimal displayed value)												
• Engine speed 2900...3100 rpm												
Read measured value block 0										Appears on display		
x	x	x	x	x	x	x	x	x	x			
1	2	3	4	5	6	7	8	9	10	Display zones	Specification	Corresponds to
										Mass of air	>210	>700 mg/H
										Fuel temperature	85…178	20…85 °C
										Intake manifold temperature	190…51	5…100 °C
										Coolant temperature	80…36	80…110 °C
										Atmospheric pressure	181…222	900...1100 mbar
										Intake manifold pressure	177…216	1800…2200 mbar

Copyright by Volkswagen AG. Volkswagen AG does not guarantee or accept any liability with respect to the correctness of information in this document. Copying for private or commercial purposes, in part or in whole, is not permitted unless authorised by Volkswagen AG.

satelettronica

Display group 000 (decimal displayed value)		
Quantity injected	156…175	43…48 mg/stroke
Accelerator pedal position	255	100 %
Start of delivery	79…56	15…22° BTDC
Engine speed	134…154	2800...3200 rpm

6.4.2 Display group 004 at full throttle (road test in 3rd gear, coolant temperature not below 80 °C)

Note

- *When testing, accelerate the vehicle at full throttle.*
- *The measured values must be printed out or read (2nd person required) when the revolutions reach 3000 rpm.*

Display group 004 -unit injector valve activation-						
Read measured value block 4 →				Appears on display		
xxxx rpm	xx.x ° BTDC	xx.x °CA	xx.x °CA			
1	2	3	4	Display zones	Specification	Evaluation
				Synchronisation angle	-6…+6° CA	⇒ page 34
			Injection period (specified)		17…24° CA	---
		Commencement of injection (specified)			15…22° BTDC	---
	Engine speed				2800...3200 rpm	---

6.4.3 Display group 008 at full throttle (road test in 3rd gear, coolant temperature not below 80 °C)

Note

- *When testing, accelerate the vehicle at full throttle.*
- *The measured values must be printed out or read (2nd person required) when the revolutions reach 3000 rpm.*

Display group 008 -quantity limitation-						
Read measured value block 8 →				Appears on display		
xxxx rpm	xx.x mg/H	xx.x mg/H	xx.x mg/H			
1	2	3	4	Display zones	Specification	Evaluation
				Injected quantity limitation due to air mass drawn in (smoke prevention)	46…55 mg/H	⇒ page 41
			Injected quantity limitation via revs. (torque limitation)		43…48 mg/H	⇒ page 41
		Quantity injected (driver's requirements)			60…69 mg/H	⇒ page 41

Protected by copyright. Copyright by Volkswagen AG.
Copyright by Volkswagen AG. Volkswagen AG does not guarantee or accept any liability with respect to the correctness of information. Transmission to third parties or in whole, is not permitted without authorisation by Volkswagen AG. Copyright by Volkswagen AG.
satelettronica

Protected by copyright. Copyright by Volkswagen AG. Volkswagen AG does not guarantee or accept any liability with respect to the correctness of information in this document. Copyright by Volkswagen AG. Reproduction, in whole or in part, for private or commercial purposes, is not permitted unless authorised by Volkswagen AG.

Display group 008 -quantity limitation-		
Engine speed	2800...3200 rpm	---

6.4.4 Evaluation: Injected quantity (driver's requirement) display

Display fault reader -V.A.G 1551-	Possible fault cause	Fault elimination
Below 60 mg/H	♦ No full throttle	– Repeat test at full throttle.
	♦ Defective accelerator position sender -G79-	– Check accelerator position sender -G79- ⇒ page 133

6.4.5 Evaluation: Injected quantity limitation via revs. (torque limitation) display

Display fault reader -V.A.G 1551-	Possible fault cause	Fault elimination
Below 43 mg/H	♦ Speed too high or too low	– Read specification at 3000 rpm.

6.4.6 Evaluation: Injection quantity limitation due to air mass drawn in (smoke prevention) display

Display fault reader -V.A.G 1551-	Possible fault cause	Fault elimination
Below 46 mg/H	♦ Air mass drawn in insufficient	– Check air mass meter -G70- ⇒ page 175
	♦ Exhaust recirculation quantity too high	– Check exhaust gas recirculation ⇒ page 198

6.4.7 Display group 010 at full throttle (road test in 3rd gear, coolant temperature not below 80 °C)

Note

- *When testing, accelerate the vehicle at full throttle.*
- *The measured values must be printed out or read (2nd person required) when the revolutions reach 3000 rpm.*

Display group 010 -air quantities-						
Read measured value block 10 →				Appears on display		
xxx mg/H	xxxx mbar	xxxx mbar	xxx.x %			
1	2	3	4	Display zones	Specification	Evaluation
				Accelerator pedal position	100 %	⇒ page 42
				Intake manifold pressure (charge pressure)	1800…2200 mbar	⇒ page 42
				Atmospheric pressure (ambient pressure)	900...1100 mbar	---

satelettronica

Display group 010 -air quantities-		
Air mass drawn in	>700 mg/H	⇒ page 42

6.4.8 Evaluation: Air mass drawn in display

Display fault reader -V.A.G 1551-	Possible fault cause	Fault elimination
Below 700 mg/H	♦ Revs. too low or too high	– Read specification at 3000 rpm.
	♦ Charge pressure too low	– Checking charge pressure control ⇒ page 148 .
	♦ Defective air mass meter -G70-	– Check air mass meter -G70- ⇒ page 175 – If a fault is present the measured value block indicates a constant air mass value of approx. 539 mg/H over total revolution and load range

6.4.9 Evaluation: Intake manifold pressure (charge pressure) display

Display fault reader -V.A.G 1551-	Possible fault cause	Fault elimination
Below 1800 mbar	♦ Charge pressure control defective	– Checking charge pressure control ⇒ page 148 .
Over 2200 mbar	♦ Turbocharger defective	

6.4.10 Evaluation: Accelerator pedal position display

Display fault reader -V.A.G 1551-	Possible fault cause	Fault elimination
Below 100 %	♦ No full throttle	– Repeat test at full throttle.
	♦ Defective accelerator position sender -G79-	– Check accelerator position sender -G79- ⇒ page 133

6.4.11 Display group 011 at full throttle (road test in 3rd gear, coolant temperature not below 80 °C)

Note

- *When testing, accelerate the vehicle at full throttle.*
- *The measured values must be printed out or read (2nd person required) when the revolutions reach 3000 rpm.*

Display group 011 -charge pressure control-	
Read measured value block 11 →	Appears on display

Protected by copyright. Copying for private or commercial purposes, partly or wholly is not permitted unless authorised by Volkswagen AG. Volkswagen AG does not guarantee or accept any liability with respect to the correctness of information in this document. Copyright by Volkswagen AG.
satelettronica

Display group 011 -charge pressure control-						
xxxx rpm	xxxx mbar	xxxx mbar	xxx %			
1	2	3	4	Display zones	Specification	Evaluation
				Duty cycle from charge pressure control valve	40…95 %	---
		Charge pressure (actual)			1800…2200 mbar	⇒ page 43
	Charge pressure (specified)				1800…2100 mbar	---
Engine speed					2800...3200 rpm	---

6.4.12 Evaluation: Charge pressure display (actual)

Display fault reader -V.A.G 1551-	Possible fault cause	Fault elimination
Below 1800 mbar	♦ Charge pressure control defective	– Checking charge pressure control ⇒ page 148 .
	♦ Turbocharger defective	
	♦ Measured at high altitude	No fault, if possible repeat measurement at 0 m NN (sea level)
Over 2200 mbar	♦ Turbocharger defective	– Checking charge pressure control ⇒ page 148 .

Protected by copyright. Copying for private or commercial purposes, in part or in whole, is not permitted unless authorised by Volkswagen AG. Volkswagen AG does not guarantee or accept any liability with respect to the correctness of information in this document. Copyright by Volkswagen AG.

satelettronica

10 – Removing and installing engine

1 Removing and installing engine

Special tools and workshop equipment required

- Lifting tackle -2024 A-
- Support clamp -VW 313-
- Engine and gearbox support -VW 540-
- Workshop hoist -V.A.G 1202 A- or workshop hoist -VAS 6100-
- Drip tray -V.A.G 1306- or drip tray for workshop hoist -VAS 6208-
- Torque wrench -V.A.G 1331-

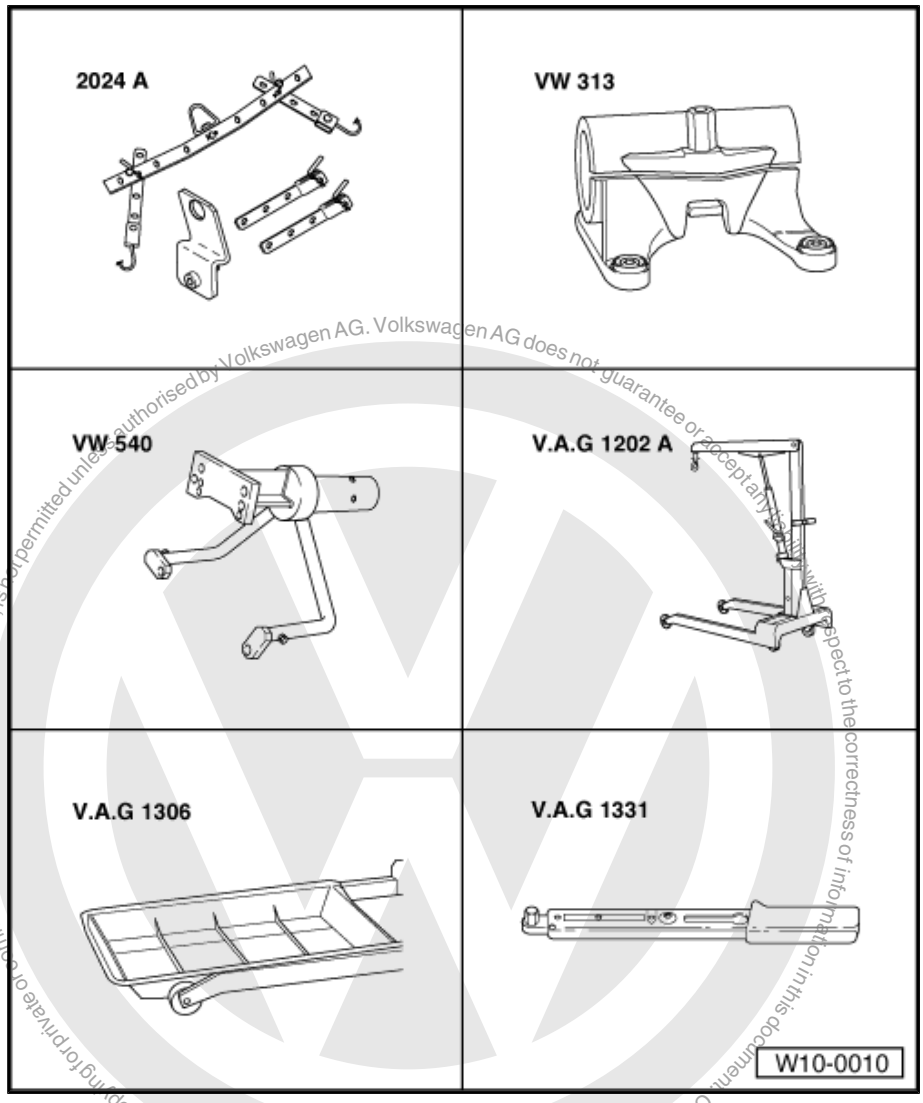

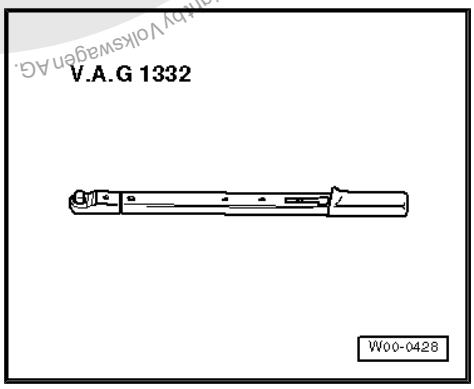

Protected by copyright. Copying for private or commercial purposes, in part or in whole, is not permitted unless authorised by Volkswagen AG. Volkswagen AG does not guarantee or accept any liability with respect to the correctness of information in this document. Copyright by Volkswagen AG.
satelettronica

- Torque wrench -V.A.G 1332-
- Spring-type clip pliers -VAS 5024A-

Not illustrated:

- Grease -G 000 100- (vehicles with manual gearbox)
- Cable ties

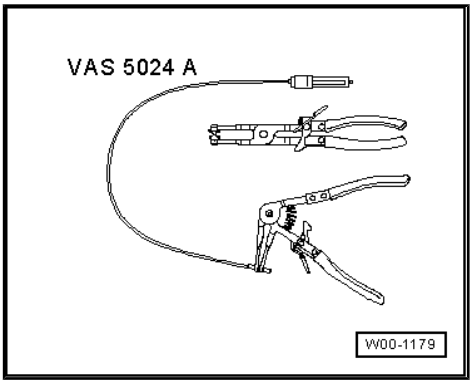

1.1 Notes on removing

Note

Before carrying out further work, disconnect battery earth strap. First check whether a coded radio is fitted. Obtain anti-theft code first if necessary.

– The engine is removed forwards together with the gearbox.
– With ignition switched off, disconnect earth strap from battery.
– All cable ties which are opened or cut through when the engine is removed must be replaced in the same position when the engine is installed.
– Remove engine cover.
– Remove battery.
– Remove battery tray.
– Disconnect fuel supply and return lines at fuel filter.
– Remove connecting pipe between charge air cooler and intake connection.
– Remove connecting pipe between air mass metre and turbo-charger.
– Pull connectors off thermo switch and radiator fan.
– Remove noise insulation tray ⇒ Rep. Gr. 50 .
– Drain coolant ⇒ page 117 .
– Pull radiator coolant hoses off engine using hose clip pliers -V.A.G 1921- or spring-type clip pliers -VAS 5024A- .

Vehicles with air conditioning:

– Observe additional remarks and installation work ⇒ page 49 .

Continuation for all vehicles

– Remove lock carrier with attachments ⇒ Rep. Gr. 50
– Remove hydraulic clutch slave cylinder ⇒ Rep. Gr. 30

Note

Clutch pedal must not be depressed.

– Disconnect selector mechanism from gearbox ⇒ Rep. Gr. 34

Protected by copyright. Copying for private or commercial purposes, in part or in whole, is not permitted unless authorised by Volkswagen AG. Volkswagen AG does not guarantee or accept any liability with respect to the correctness of information in this document. Copyright by Volkswagen AG.
satelettronica

– Pull vacuum and breather hoses off engine.

– Disconnect all electric wires from gearbox, alternator and starter and lay to side.

– Pull off or disconnect all other electrical connections as necessary from engine and lay to side.

– Unscrew pendulum support -1- from gearbox.

– Unbutton and remove connecting pipe between charge air cooler and turbocharger from sump.

– Remove drive shafts from gearbox ⇒ Rep. Gr. 40 .

– Remove poly V-belt ⇒ page 55 .

– Unbolt power steering vane pump on bracket and place to one side, hoses remain connected ⇒ Rep. Gr. 48

– Remove exhaust pipe from turbocharger.

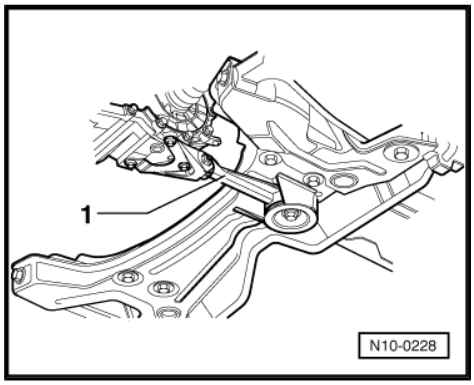

– Attach lifting tackle -2024 A- as follows and lift slightly with workshop crane -V.A.G 1202 A- or workshop hoist -VAS 6100- :

Belt pulley end: 2nd hole in hook rail at position 1

Flywheel end: 4th hole in hook rail at position 7.

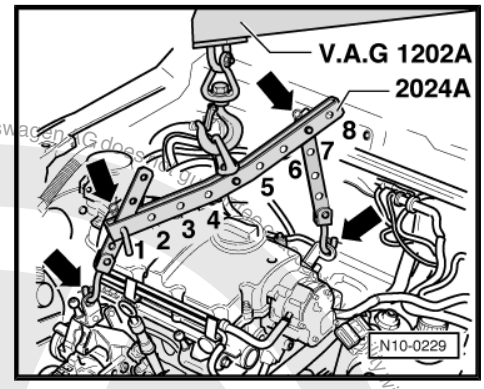

WARNING

Use locking pins -arrows- to secure hooks and locating pins.

Note

- *The positions marked 1...4 on the bar must be towards the pulley end.*
- *The holes in the hooks are counted up from the hook.*

– Unbolt assembly from gearbox and engine mountings -arrows-.

– Lower assembly until it is released from the gearbox mounting.

– Pull assembly out forwards. When doing this, turn the assembly as necessary and lower it slightly.

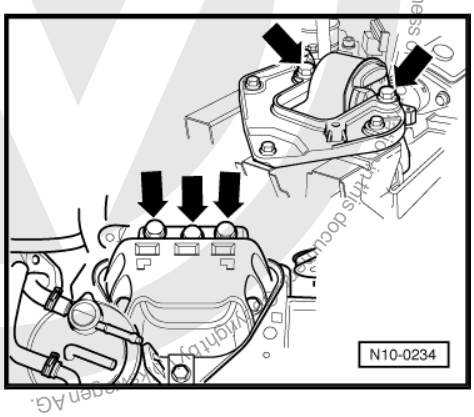

Note

When lifted out, the assembly must be carefully guided to prevent damage to the bodywork.

– Secure engine to support clamp -VW 313- using engine and gearbox support -VW 540- .

1.2 Securing engine to assembly stand

When working on the engine, secure it to support clamp -VW 313- of the assembly stand using engine and gearbox support -VW 540- .

Protected by copyright. Copying for private or commercial purposes, in part or in whole, is not permitted unless authorised by Volkswagen AG. Volkswagen AG does not guarantee or accept any liability with respect to the correctness of this document.
satelettronica

Procedure

– Remove gearbox.

– Connect lifting tackle -2024 A- as shown.

Pulley end: 4th hole in hook rail at position 1

Flywheel end: 2nd hole in hook rail at position 8

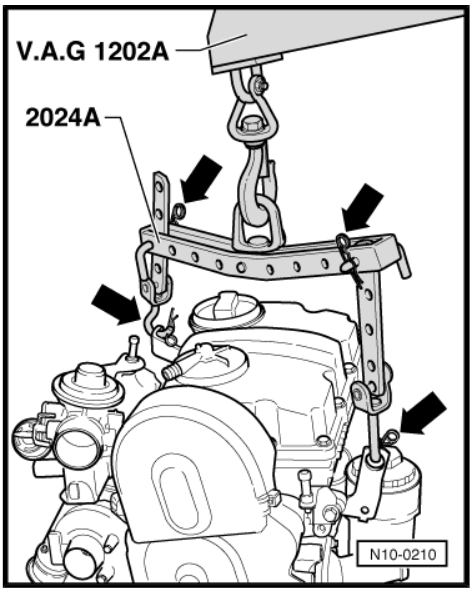

WARNING

Use locking pins -arrows- to secure hooks and locating pins.

Note

- *The positions marked 1...4 on the bar must be towards the pulley end.*
- *The holes in the hooks are counted up from the hook.*

– Secure engine to support clamp -VW 313- using engine and gearbox support -VW 540- .

1.3 Notes on installing

Installation is carried out in the reverse order. When installing, note the following:

Caution

When doing any repair work, especially in the engine compartment, pay attention to the following due to the cramped conditions:

- *Route all the various lines (e.g. for fuel, hydraulics, activated charcoal filter system, coolant, refrigerant, brake fluid and vacuum) and electrical wiring in their original positions.*
- *To avoid damage to lines, ensure sufficient clearance to all moving or hot components.*

– Check clutch release bearing for wear and renew if necessary.

– Lightly lubricate clutch release bearing, release bearing guide sleeve and splines on input shaft with grease -G 000 100- .

– Check whether dowel sleeves for centring engine and gearbox are in cylinder block and install if necessary.

– When swinging engine in, ensure that there is clearance between drive shafts.

– Align engine mountings stress-free by rocking, if necessary loosen engine mountings to body.

Note

Torque settings for engine and gearbox mountings ⇒ page 48 .

– Electrical connections and routing ⇒ Rep. Gr. 97 .

– Install drive shafts ⇒ Rep. Gr. 40 .

satelettronica
Copyright by Volkswagen AG. Protected by copyright. Copying for private or commercial purposes, in part or in whole, is not permitted unless authorised by Volkswagen AG. Volkswagen AG does not guarantee or accept any liability with respect to the correctness of information in this document.

Protected by copyright. Copying for private or commercial purposes, in part or in whole, is not permitted unless authorised by Volkswagen AG. Volkswagen AG does not guarantee or accept any liability with respect to the correctness of information in this document. Copyright by Volkswagen AG.

- Install front exhaust pipe ⇒ page 194 .
- Install hydraulic clutch slave cylinder ⇒ Rep. Gr. 30
- Install gear selector mechanism ⇒ Rep. Gr. 34 .
- Adjust selector cable, if necessary ⇒ Rep. Gr. 34 .
- Install power assisted steering vane pump ⇒ Rep. Gr. 48 .
- Install lock carrier with attachments ⇒ Rep. Gr. 50
- Fill with coolant ⇒ page 117 .
- Install poly V-belt ⇒ page 55 .
- Install air mass meter.
- Install connecting pipes between air mass meter and turbocharger and between charge air cooler/turbocharger and intake connecting flange/turbocharger.
- Fit connecting pipe between charge air cooler and turbocharger on sump.
- Install noise insulation tray ⇒ Rep. Gr. 50 .
- Check headlight adjustment and correct if necessary ⇒ Maintenance ; Booklet 28
- Carry out road test and read all fault memories ⇒ page 7 .

Torque settings:

Threaded connection		Torque setting
Bolts, nuts	M 6	10 Nm
	M 8	20 Nm
	M10	45 Nm
	M12	60 Nm
Deviations		
Front exhaust pipe to exhaust turbocharger		25 Nm

1.4 Assembly mountings

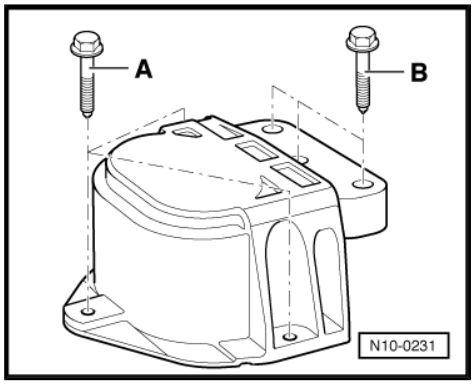

Engine assembly mounting

A[9] = 20 Nm + 90° (1/4 turn) further

B[9] = 40 Nm + 90° (1/4 turn) further

9) Renew

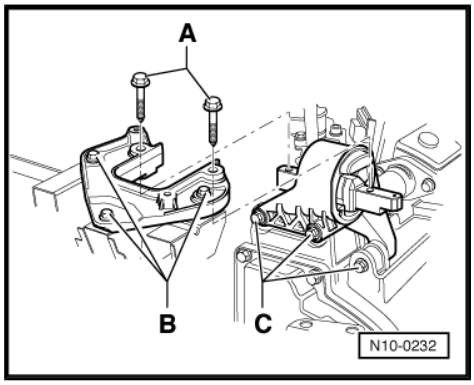

Gearbox assembly mounting

A[10] = 40 Nm + 90° (1/4 turn) further

B[10] = 20 Nm + 90° (1/4 turn) further

C[10] = 40 Nm + 90° (1/4 turn) further

10) Renew

satelettronica

Pendulum support

A[11] = 90 Nm + 90° (1/4 turn) further

B[11] = 40 Nm + 90° (1/4 turn) further

C[11] = 90 Nm + 90° (1/4 turn) further

11) Renew

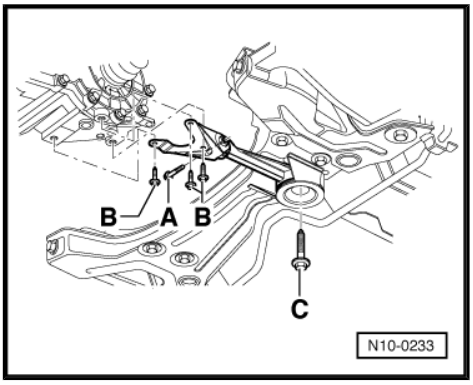

1.5 Additional notes and assembly work for vehicles with air conditioner

Note

- *The air conditioning system refrigerant lines must be opened to remove the engine.*
- *To prevent damage to condenser or to refrigerant lines and hoses, ensure that lines and hoses are not stretched, kinked or bent.*

– Extract refrigerant from air conditioner refrigerant circuit ⇒ Rep. Gr. 87

– Open air conditioner refrigerant circuit on condenser at top and bottom and on bulkhead ⇒ Rep. Gr. 87

Note

The air conditioner compressor need not be removed.

Protected by copyright. Copying for private or commercial purposes, in part or in whole, is not permitted unless authorised by Volkswagen AG. Volkswagen AG does not guarantee or accept any liability with respect to the correctness of information in this document. Copyright by Volkswagen AG.
satelettronica

13 – Crankshaft group

1 Dismantling and assembling engine

Note

- *If large quantities of swarf or metal particles (caused, for example, by partial seizure of the crankshaft or conrod bearings) are found in the engine oil when performing repairs, clean the oil passages thoroughly and renew the oil cooler in order to prevent subsequent damage.*
- *All bearing and running surfaces must be oiled before assembly.*

1.1 Assembly overview

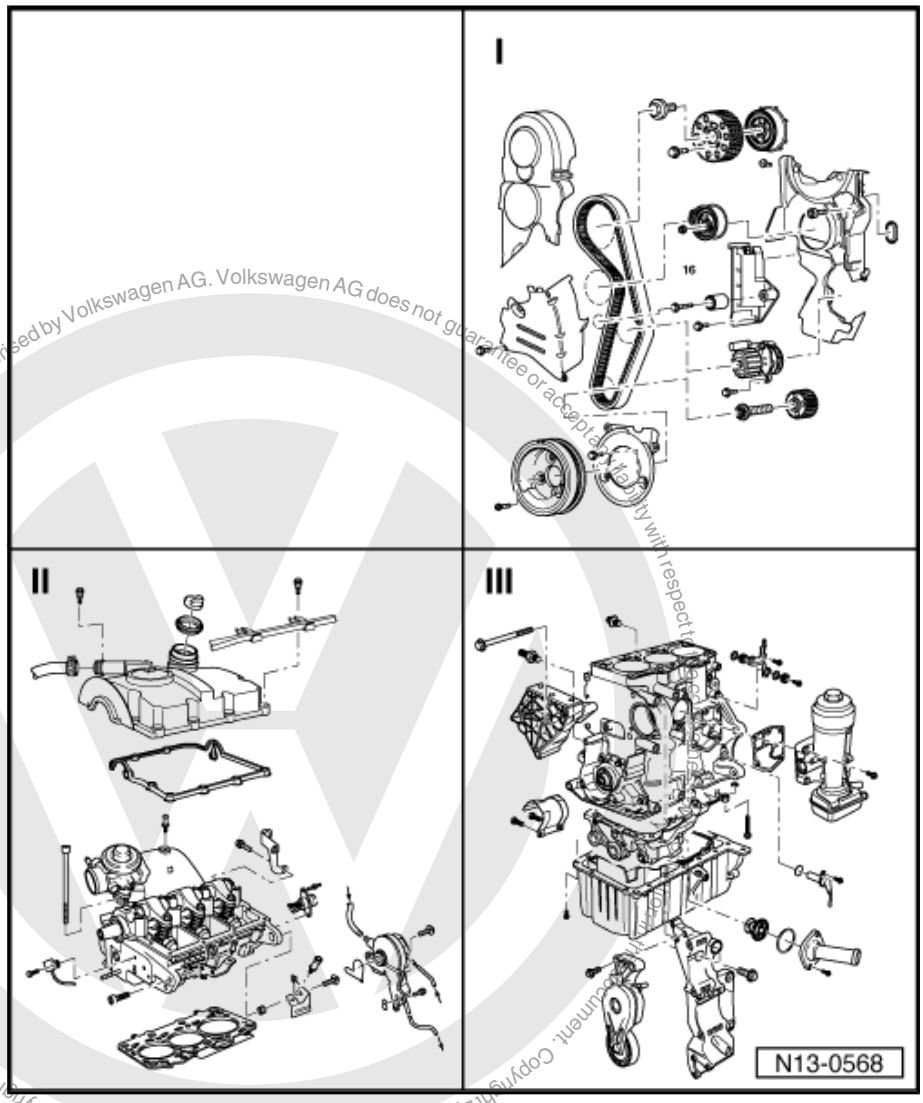

Part I ⇒ page 51
Part II ⇒ page 52
Part III ⇒ page 54

Protected by copyright. Copying for private or commercial purposes, in part or in whole, is not permitted unless authorised by Volkswagen AG. Volkswagen AG does not guarantee or accept any liability with respect to the accuracy of this document. Copyright by Volkswagen AG.
satelettronica

1.1.1 Part I

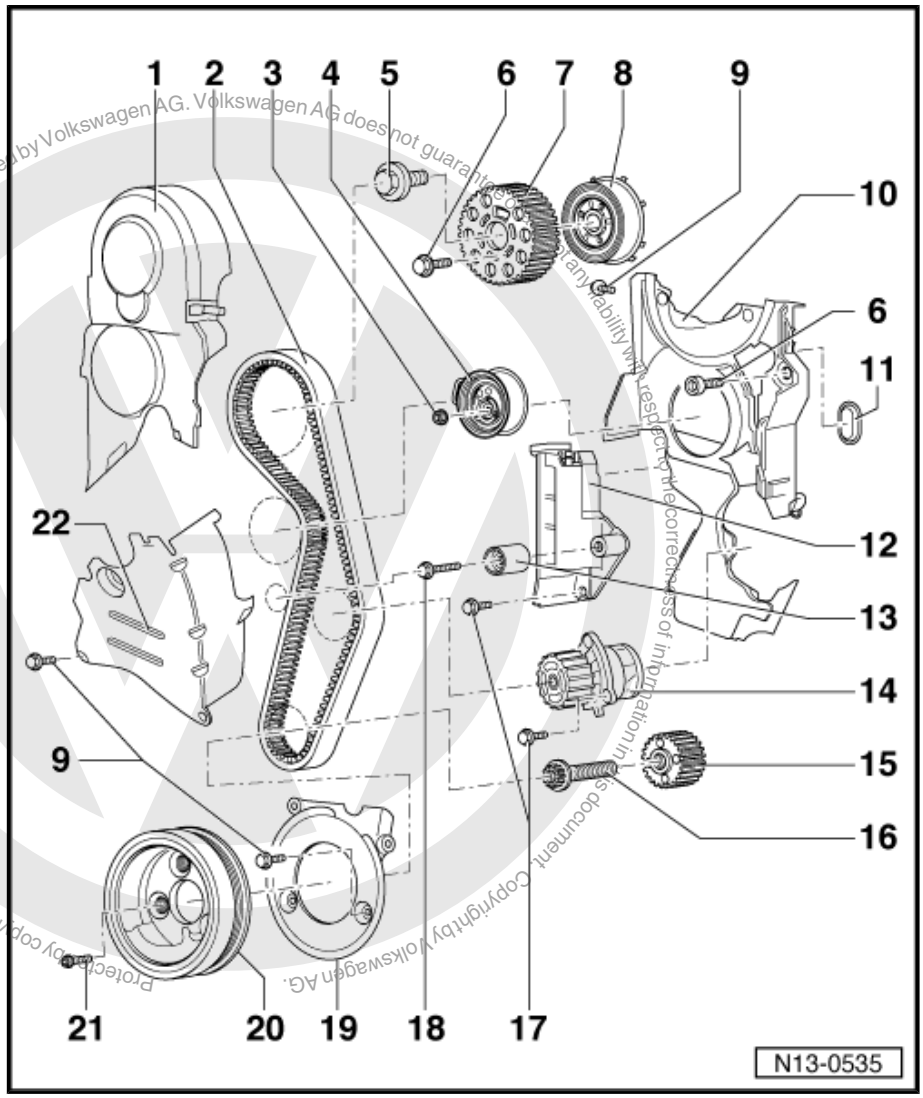

1 - Toothed belt guard upper part

2 - Toothed belt

- ❑ Mark direction of rotation before removing.
- ❑ Check for wear.
- ❑ Do not kink.
- ❑ Removing, installing and tensioning ⇒ page 79

3 - 20 Nm + 1/8 turn (45°) further

4 - Tensioning roller

5 - 100 Nm

6 - 25 Nm

7 - Camshaft toothed belt pulley

8 - Hub

- ❑ With sender wheel.
- ❑ Use counter-hold tool -T10051- to loosen and tighten.
- ❑ To remove, use puller -T10052- .
- ❑ Removing and installing ⇒ page 97 .

9 - 10 Nm

10 - Rear toothed belt guard

11 - Sealing grommet

- ❑ Renew if damaged.

12 - Toothed belt tensioner

13 - Idler roller

14 - Coolant pump

- ❑ Removing and installing ⇒ page 121 .

15 - Crankshaft toothed belt pulley

16 - 120 Nm + 1/4 turn (90°) further

- ❑ Renew
- ❑ Use counter-hold tool -3415- to loosen and tighten.
- ❑ Do not additionally oil or grease thread and shoulder.
- ❑ Turning further can be done in several stages.

17 - 15 Nm

18 - 20 Nm

19 - Toothed belt guard lower part

20 - Belt pulley and vibration damper

- ❑ Can only be installed in one position. Holes are offset.

Protected by copyright. Copying for private and commercial purposes, in part or in whole, is not permitted unless authorised by Volkswagen AG. Volkswagen AG does not guarantee or assume any liability with respect to the correctness of information in this document. Copyright by Volkswagen AG.
satelettronica

21 - 10 Nm + 1/4 turn (90°) further

22 - Toothed belt guard centre part

1.1.2 Part II

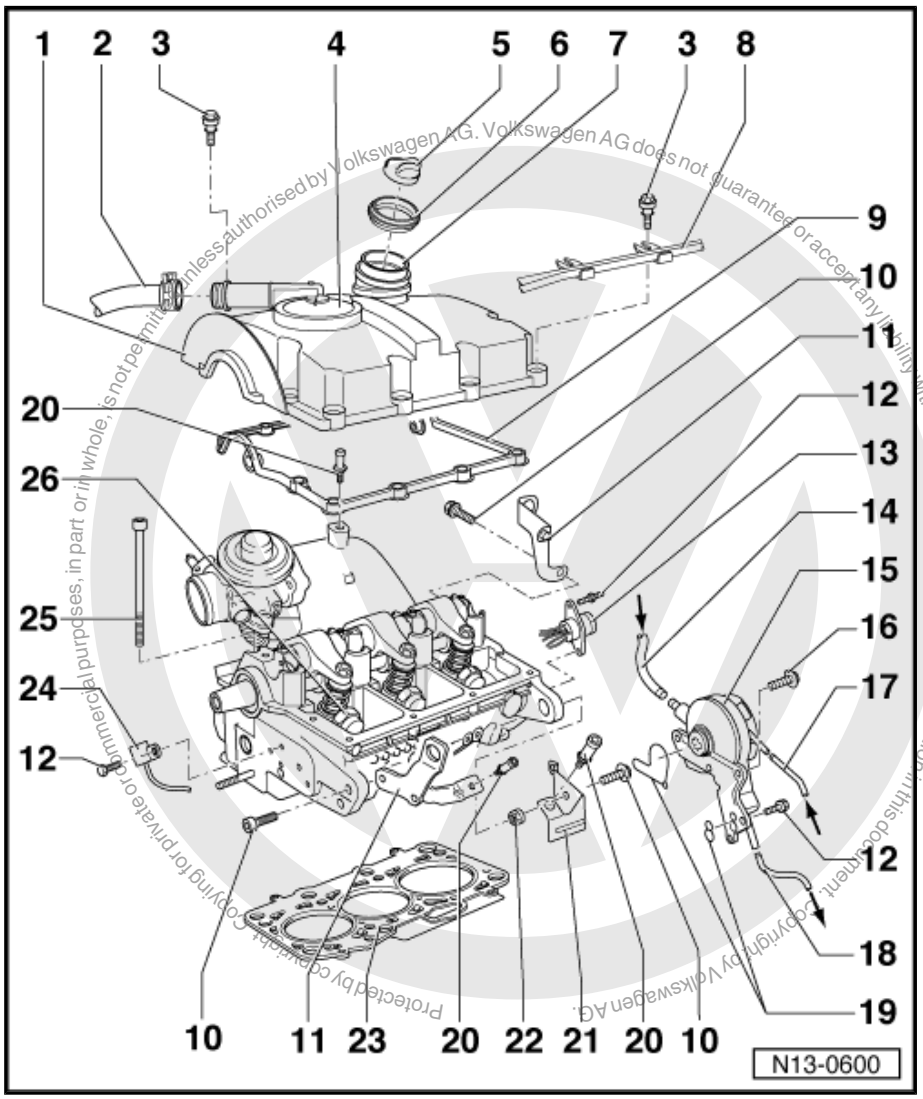

1 - Cylinder head cover
- ❑ With oil filler neck
- ❑ If cylinder head cover is damaged, renew along with oil filler neck
- ❑ Before fitting, thoroughly clean sealing surface of cylinder head with clean cloth.

2 - To turbocharger.

3 - 10 Nm
- ❑ First hand tighten all bolts.
- ❑ Then, first tighten both upper bolts and then tighten the remainder to prescribe torque setting working from inside to outside using diagonal sequence

4 - Pressure control valve
- ❑ For crankcase breather.

5 - Cap
- ❑ Renew seal if damaged

6 - Seal
- ❑ Renew if damaged.

7 - Oil filler neck
- ❑ Renew

8 - Bracket
- ❑ With fuel lines

9 - Cylinder head cover gasket
- ❑ Renew if damaged.

10 - 20 Nm

11 - Lifting eye

12 - 10 Nm

13 - Central connector
- ❑ For unit injector.

14 - From brake servo

15 - Tandem pump
- ❑ Must not be taken apart
- ❑ For fuel and vacuum supply.
- ❑ Removing and installing ⇒ page 139 .
- ❑ Checking ⇒ page 137

Protected by copyright. Copying for private or commercial purposes, in part or in whole, is not permitted unless authorised by Volkswagen AG. Volkswagen AG does not guarantee or accept any liability with respect to the correctness of information in this document. Copyright by Volkswagen AG.
satelettronica

16 - 25 Nm

17 - Supply hose

- ❑ From fuel filter ⇒ Item 10 (page 127)
- ❑ White or with white marking.
- ❑ Check for secure seating.
- ❑ Secure with spring-type clips.

18 - Return hose

- ❑ To fuel filter ⇒ Item 6 (page 127) .
- ❑ Blue or with blue marking.
- ❑ Check for secure seating.
- ❑ Secure with spring-type clips.

19 - Seal

- ❑ Renew

20 - Pin, 10 Nm

- ❑ For engine cover.

21 - Bracket

22 - Hexagon nut with cone

23 - Cylinder head gasket

- ❑ Renew
- ❑ Note marking ⇒ page 74
- ❑ If renewed, change coolant in entire system.

24 - Hall sender -G40-

- ❑ For camshaft position
- ❑ To remove sealing grommet, unbutton from rear toothed belt guard.
- ❑ Checking ⇒ page 181

25 - Cylinder head bolt

- ❑ Renew
- ❑ Observe sequence when loosening and tightening ⇒ page 84 .
- ❑ Before installing, place washers in cylinder head ⇒ Item 4 (page 90) .

26 - Unit injector

- ❑ Removing and installing ⇒ page 159 .

Protected by copyright. Copying for private or commercial purposes, in part or in whole, is not permitted unless authorised by Volkswagen AG. Volkswagen AG does not guarantee or accept any liability with respect to the correctness of information in this document. Copyright by Volkswagen AG.
satelettronica

1.1.3 Part III

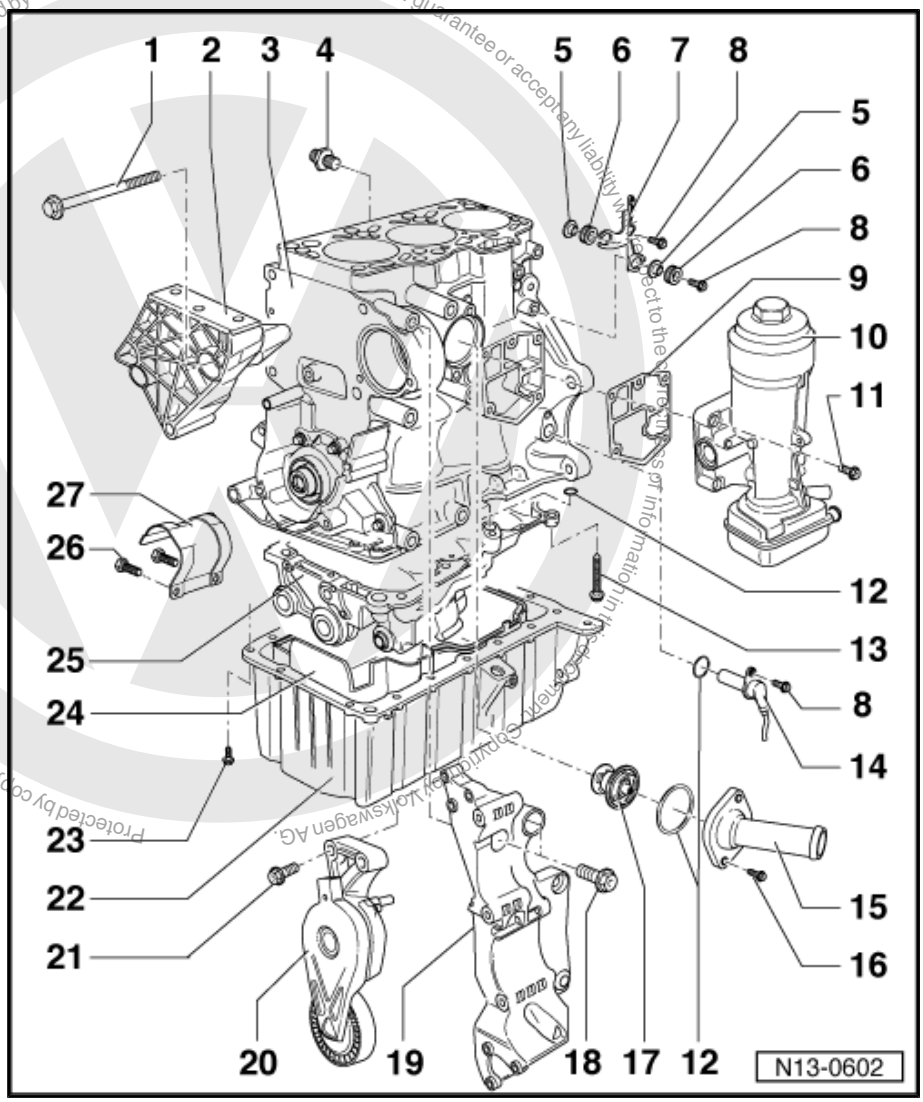

1 - 45 Nm

2 - Engine support

3 - Cylinder block

- ❑ Removing and installing sealing flange and flywheel ⇒ page 58 .
- ❑ Dismantling and assembling pistons and conrods ⇒ page 71 .

4 - Union, 40 Nm

- ❑ For oil return line from turbocharger
- ❑ Renew

5 - Spacer sleeve

6 - Rubber bush

7 - Bracket

- ❑ For connectors from Hall sender -G40- and engine speed sender -G28-

8 - 10 Nm

9 - Seal

- ❑ Renew

10 - Oil filter bracket

- ❑ Dismantling and assembling ⇒ page 107 .

11 - 15 Nm + 1/4 turn (90°) further

- ❑ Renew
- ❑ First fit upper left and lower right bolts and then tighten all four bolts diagonally.

12 - O-ring

- ❑ Renew

13 - 20 Nm

14 - Engine speed sender -G28-

- ❑ Checking ⇒ page 7

15 - Connection

- ❑ For thermostat.

16 - 15 Nm

17 - Thermostat

- ❑ Removing and installing ⇒ page 122 .

18 - 45 Nm

- ❑ Observe tightening sequence ⇒ page 117 .

19 - Compact bracket

- ❑ For alternator, air conditioner compressor, power steering vane pump and poly V-belt tensioning element

Protected by copyright. Copying for private or commercial purposes, in any form or medium, is not permitted unless authorised by Volkswagen AG. Volkswagen AG does not guarantee or accept any liability with respect to the correctness of information in this document. Copyright by Volkswagen AG.

satelettronica

20 - Tensioning element

- ❑ For poly V-belt.

21 - 25 Nm

22 - Sump

- ❑ Clean sealing surface before fitting.
- ❑ Install with silicone sealant -D 176 404 A2- ⇒ page 109 .
- ❑ To remove sump, gearbox must be removed ⇒ Rep. Gr. 34

23 - 15 Nm

- ❑ To remove rear bolts to gearbox, gearbox must be removed ⇒ Rep. Gr. 34

24 - Cover

- ❑ With sealing strip
- ❑ Clean strainer if dirty

25 - Retaining frame

- ❑ Before installing, check that the dowel sleeves for centring oil pump on cylinder block are fitted and the O-ring is fitted in the retaining frame
- ❑ Removing and installing ⇒ page 64 .

26 - 40 Nm

27 - Protective cap

- ❑ For drive shaft

1.2 Removing and installing poly V-belt

Special tools and workshop equipment required

- ♦ Mandrel -T10060 A-

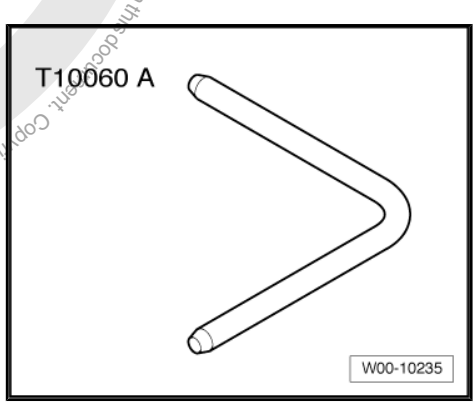

- ♦ Spanner, 15 mm

Removing

– Remove noise insulation tray ⇒ Rep. Gr. 50 .

– Remove connecting pipe between charge air cooler intake and air mass meter.

– Mark direction of rotation of poly V-belt.

Protected by copyright. Copying for private or commercial purposes, in part or in whole, is not permitted unless authorised by Volkswagen AG. Volkswagen AG does not guarantee or accept any liability with respect to the correctness of information in this document. Copyright by Volkswagen AG.
satelettronica

– Swing tensioning device -in direction of arrow- to relieve tension on poly V-belt.

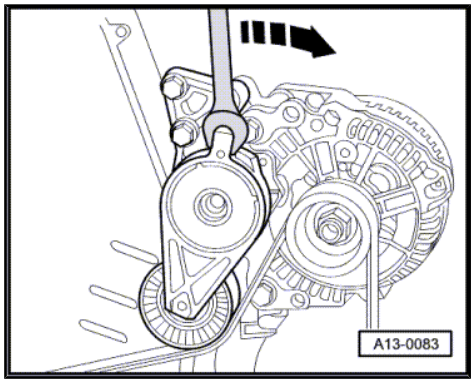

– Lock tensioning element in position with locking pin -T10060 A- .

– Remove poly V-belt.

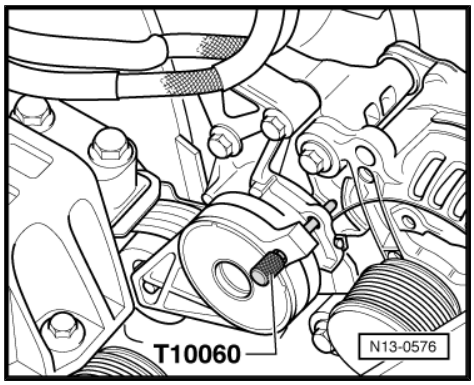

Installing

– Installation is carried out in the reverse sequence of removal.

Note

- *Before installing poly V-belt, ensure that all ancillary assemblies (alternator, air conditioner compressor, power assisted steering vane pump) are secured tightly.*
- *When fitting poly V-belt, check direction of belt rotation and proper seating of belt in pulleys.*
- *For vehicles without air conditioning, put poly V-belt over alternator last.*
- *For vehicles with air conditioning, position poly V-belt on air conditioning compressor last.*

After completing repairs always:

– Start engine and check belt running.

Belt drive without air conditioner compressor

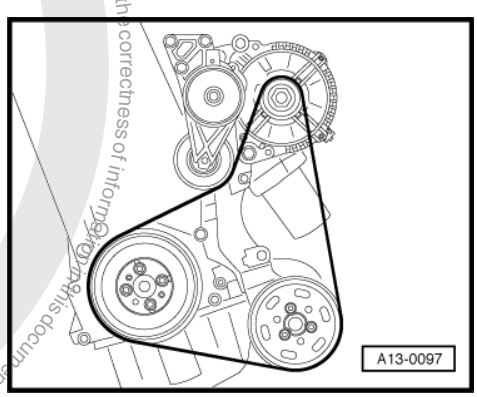

Protected by copyright. Copying for private or commercial purposes, in part or in whole, is not permitted unless authorised by Volkswagen AG. Volkswagen AG does not guarantee or accept any liability with respect to the correctness of information in this document. Copyright by Volkswagen AG.
satelettronica

Belt drive with air conditioner compressor

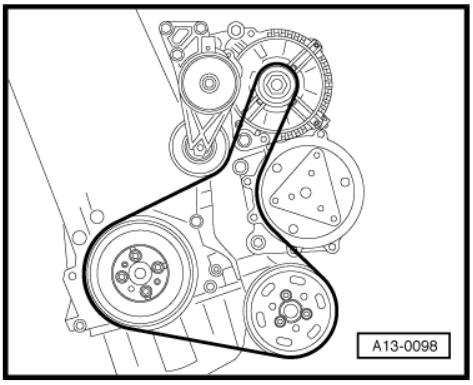

satelettronica

Protected by copyright. Copying for private or commercial purposes, in part or in whole, is not permitted unless authorised by Volkswagen AG. Volkswagen AG does not guarantee or accept any liability with respect to the correctness of information in this document. Copyright by Volkswagen AG.

2 Removing and installing sealing flange and flywheel

Note

Repairing the clutch: ⇒ Rep. Gr. 30

2.1 Assembly overview

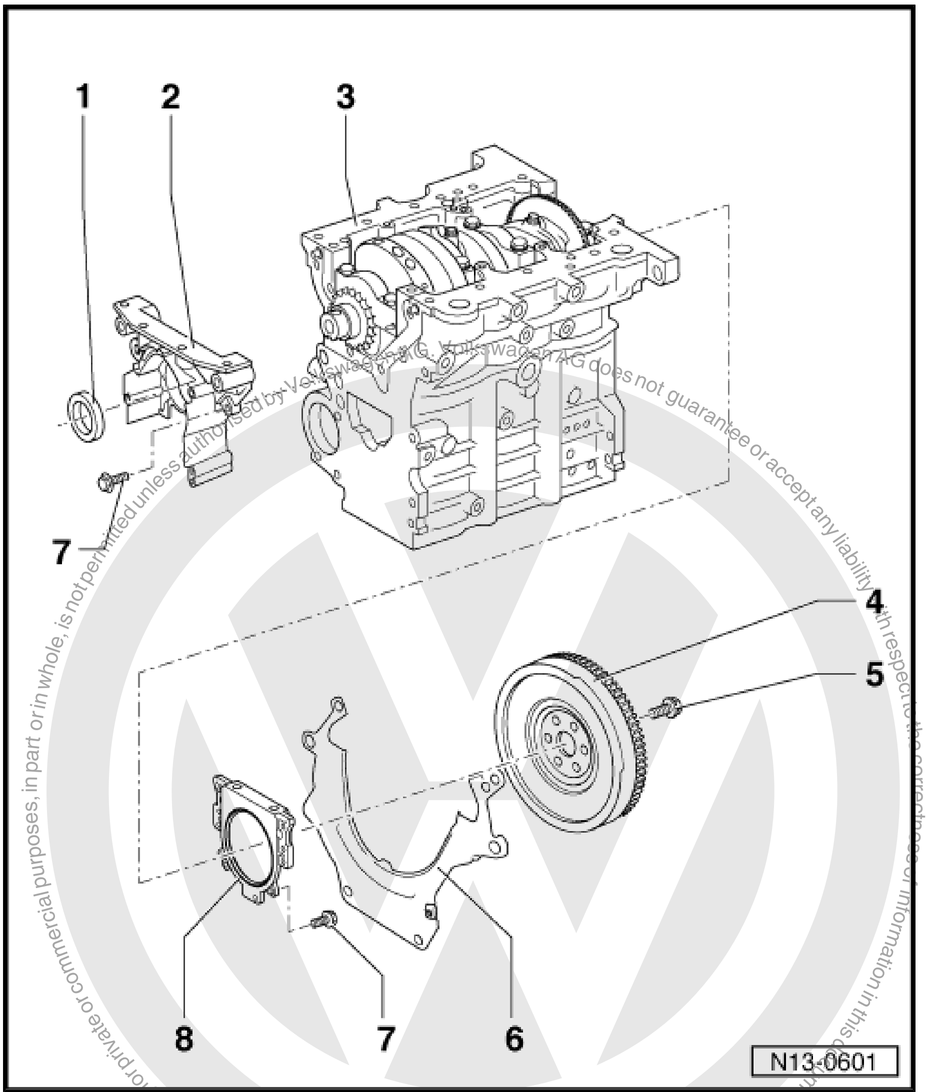

1 - Seal

- ❑ Do not additionally oil or grease sealing lip of oil seal
- ❑ Before installing, remove oil residue from crankshaft journal using a clean cloth.
- ❑ Renewing crankshaft oil seal - belt pulley end ⇒ page 59 .

2 - Sealing flange

- ❑ Must seat on dowel sleeves.
- ❑ Removing and installing ⇒ page 60 .
- ❑ Install with silicone sealant -D 176 404 A2- ⇒ page 60 .

3 - Cylinder block

- ❑ Removing and installing crankshaft ⇒ page 69 .
- ❑ Dismantling and assembling pistons and conrods ⇒ page 71 .

4 - Flywheel

- ❑ When removing and installing flywheel, lock with counter-hold tool -3386- .

5 - 60 Nm + $^1/_4$ turn (90°) further

- ❑ Renew

6 - Intermediate plate

- ❑ Must seat on dowel sleeves.
- ❑ Do not damage or bend when assembling.

7 - 15 Nm

8 - Sealing flange with oil seal

- ❑ Renew complete only.
- ❑ Do not additionally oil or grease sealing lip of oil seal
- ❑ Before installing, remove oil residue from crankshaft journal using a clean cloth.
- ❑ Use protective sleeve supplied when installing.

Protected by copyright. Copying for private or commercial purposes, in part or in whole, is not permitted unless authorised by Volkswagen AG. Volkswagen AG does not guarantee or accept any liability with respect to the correctness of information in this document. Copyright by Volkswagen AG.
satelettronica

❑ Do not remove supporting sleeve until sealing flange has been slid onto crankshaft journal.

2.2 Renewing crankshaft oil seal - pulley end

Volkswagen AG. Volkswagen AG does not guarantee or accept any liability with respect to the correctness of information in this document. Copyright by Volkswagen AG. Protected by copyright. Copying for private or commercial purposes, in part or in whole, is not permitted unless authorised by Volkswagen AG.

Special tools and workshop equipment required

- Oil seal extractor -3203-
- Counter-hold tool -3415-
- Assembly tool -T10053-
- Torque wrench -V.A.G 1331-
- Torque wrench -V.A.G 1332-

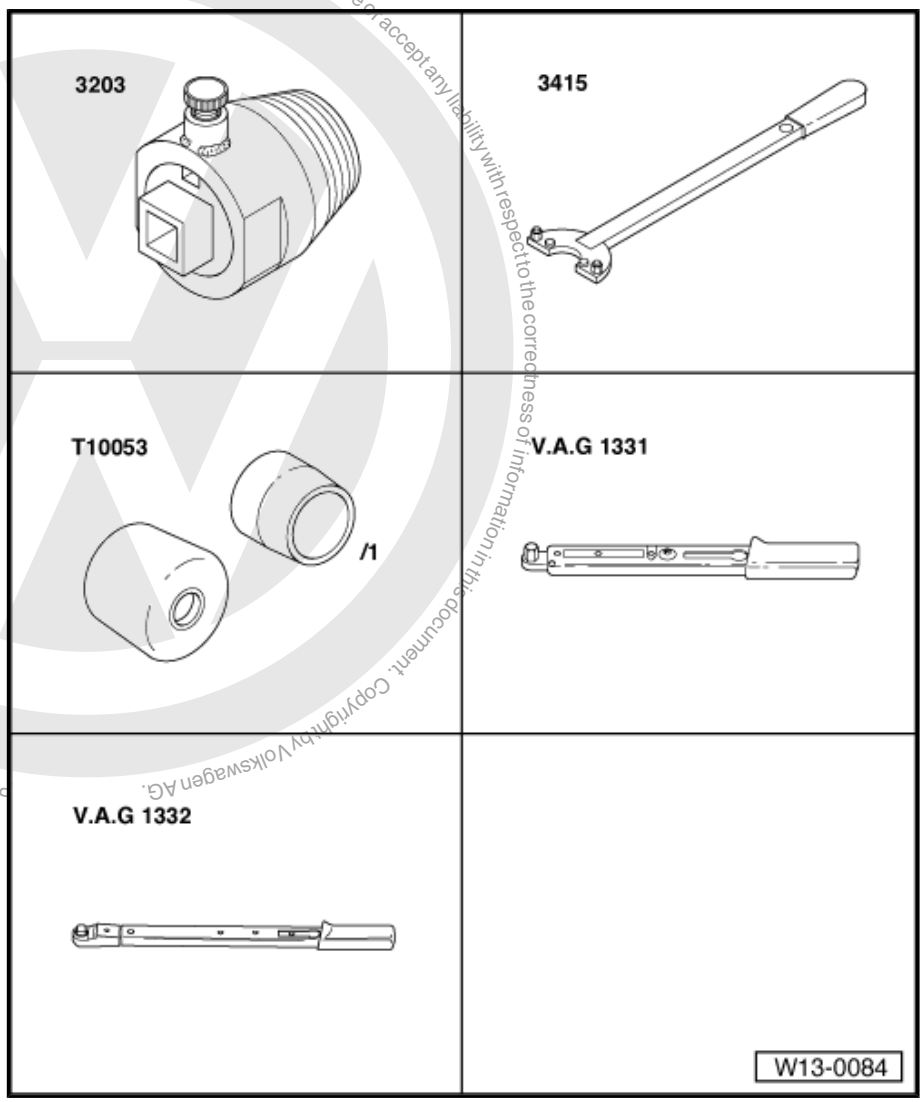

Removing

– Remove poly V-belt ⇒ page 55 .

– Remove toothed belt ⇒ page 79 .

– Remove crankshaft toothed belt pulley. To do this, lock toothed belt pulley using counter-hold tool -3415- .

– To guide seal extractor -3203- , screw centre bolt into crankshaft to stop by hand.

– Screw inner part of oil seal extractor -3203- two turns (approx. 3 mm) out of outer part and lock using knurled screw.

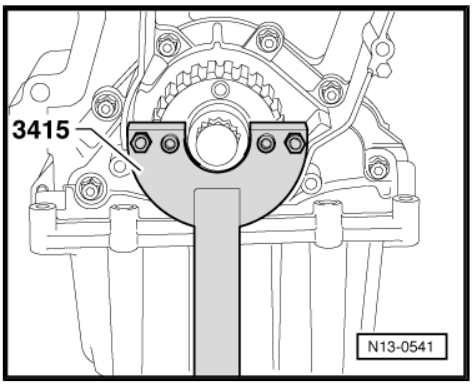

satelettronica

– Lubricate threaded head of oil seal extractor -3203- , place it in position and exerting firm pressure, screw it as far as possible into oil seal.

– Loosen knurled screw and turn inner part against crankshaft until the oil seal is pulled out.

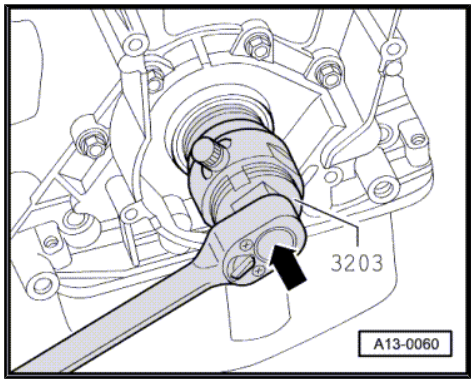

Installing

Note

The oil seal sealing lip must not be additionally oiled or greased.

– Remove oil residue from crankshaft journal using clean cloth.

– Fit guide sleeve -T10053/1- onto crankshaft journal.

– Slide oil seal over guide sleeve onto crankshaft journal.

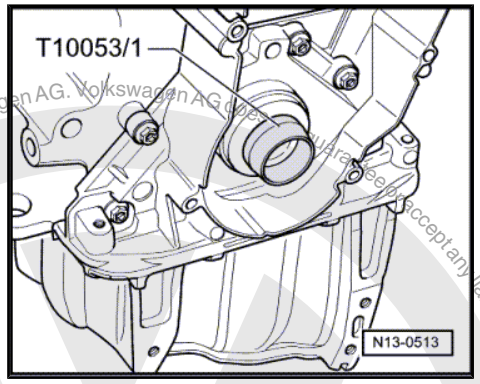

– Using press sleeve -T10053- , press in onto stop with central bolt.

– Install and tension toothed belt ⇒ page 79 .

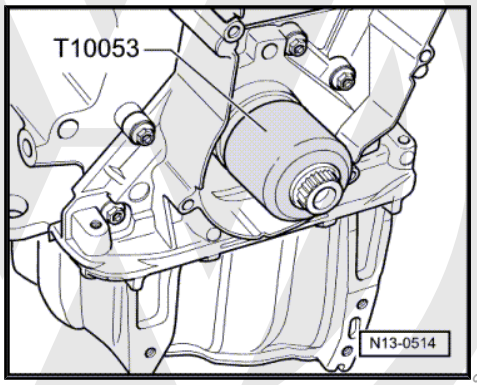

2.3 Removing and installing sealing flange - pulley end

Protected by copyright. Copying for private or commercial purposes, in part or in whole, is not permitted unless authorised by Volkswagen AG. Volkswagen AG does not guarantee or accept any liability with respect to the correctness of information in this document. Copyright by Volkswagen AG.
satelettronica

Special tools and workshop equipment required

- Counter-hold tool -3415-
- Assembly tool -T10053-
- Torque wrench -V.A.G 1331-
- Torque wrench -V.A.G 1332-

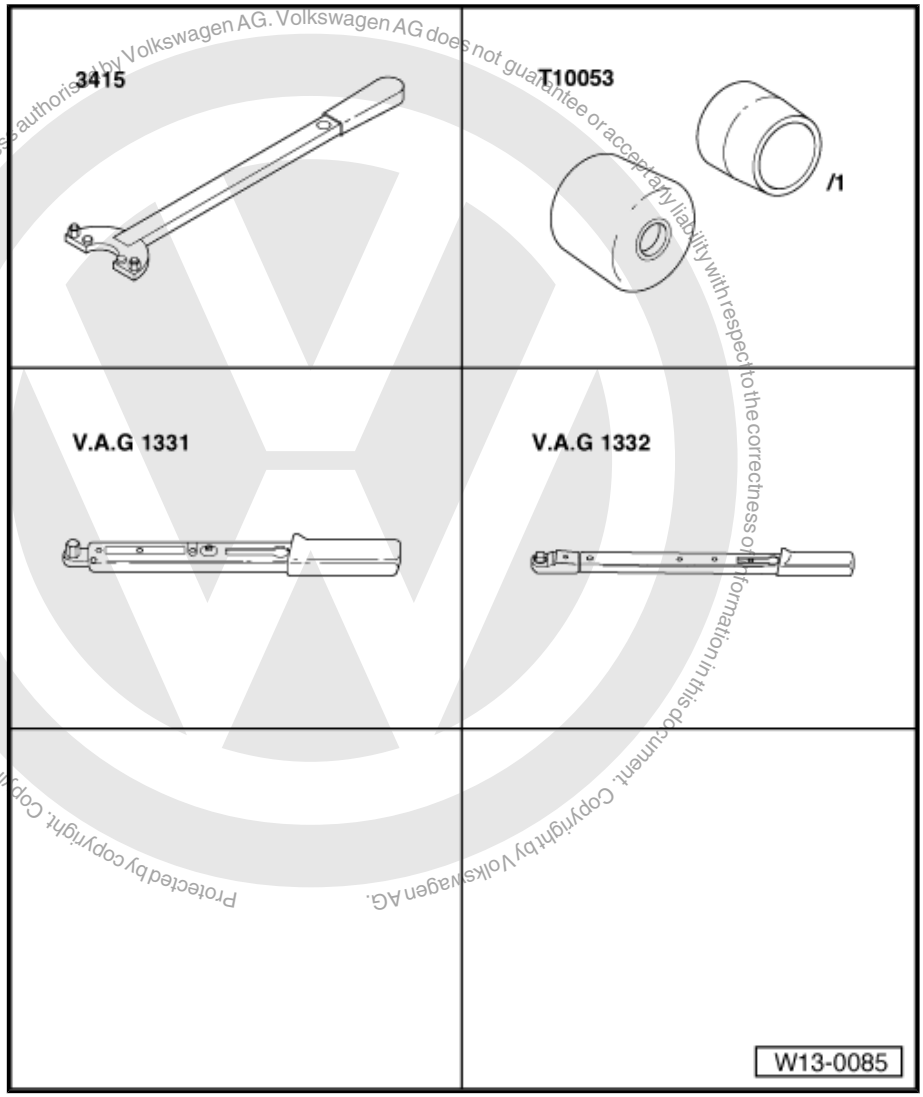

Protected by copyright. Copying for private or commercial purposes, in part or in whole, is not permitted unless authorised by Volkswagen AG. Volkswagen AG does not guarantee or accept any liability with respect to the correctness of information in this document. Copyright by Volkswagen AG.

satelettronica

Not illustrated:

- Hand drill with plastic brush attachment
- Silicone sealant -D 176 404 A2-
- Flat scraper

Removing

– Remove poly V-belt ⇒ page 55 .

– Remove toothed belt ⇒ page 79 .

– Remove crankshaft toothed belt pulley. To do this, lock toothed belt pulley using counter-hold tool -3415- .

– Drain engine oil.

– Remove sump ⇒ page 109 .

– Unbolt front sealing flange.

– Remove sealing flange; if necessary, loosen using light blows with a rubber headed hammer.

– Remove sealant residue on cylinder block with a flat scraper.

– Cover seal with a clean cloth.

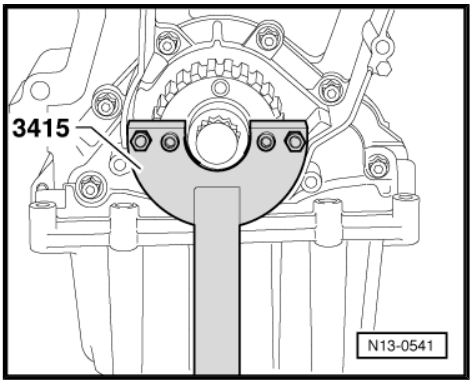

– Remove residual sealant on sealing flange using a rotating plastic brush (wear eye protection).

– Clean sealing surfaces. They must be free of oil and grease.

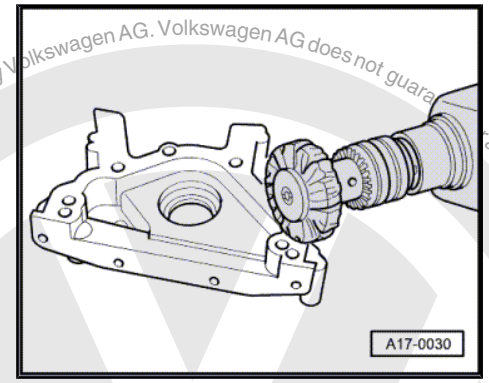

Installing

Note

- *Observe expiry date of sealing compound.*
- *Sealing flange must be installed within 5 minutes of applying silicone sealant.*

– Cut off tube nozzle at forward marking (nozzle ∅ approx. 3 mm).

– Apply silicone sealing compound, as shown, to clean sealing flange sealing surface. Sealant bead must be:

- The sealant bead should be -arrows-: 2...3 mm thick

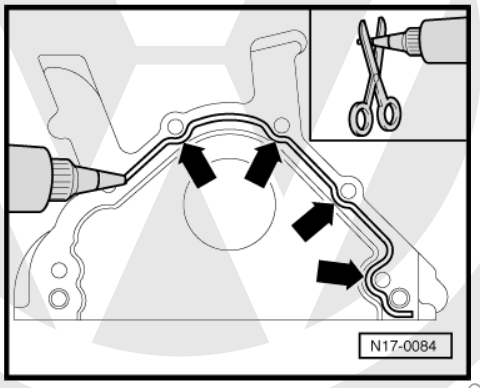

Note

- *Sealant bead should not be thicker, as otherwise excess sealant can enter the sump and clog the strainer in the oil pump suction pipe, as well as drip onto the crankshaft oil seal.*
- *Before applying sealant bead, cover sealing surface of oil seal with a clean rag.*

– Fit sealing flange immediately and lightly tighten all bolts.

Note

When fitting sealing flange with oil seal installed, use guide sleeve -T10053/1- .

– Tighten sealing flange securing bolts diagonally and alternately. Torque setting: 15 Nm

– Remove excess sealant.

– Install sump ⇒ page 109 .

Note

Sealing compound must dry for approx. 30 minutes after installation. Only then fill with engine oil.

Installing toothed belt and adjusting valve timing ⇒ page 79 .

– Install poly V-belt ⇒ page 55 .

Protected by copyright. Copyright by Volkswagen AG. Volkswagen AG does not guarantee or accept any liability with respect to the correctness of information in this document. Copyright by Volkswagen AG. is not permitted unless authorised by Volkswagen AG. Volkswagen AG does not guarantee or accept any liability with respect to the correctness of information in this document. Copyright by Volkswagen AG.
satelettronica

3 Balancer shaft and retaining frame

Note

All bearing and running surfaces must be oiled before assembly.

3.1 Assembly overview

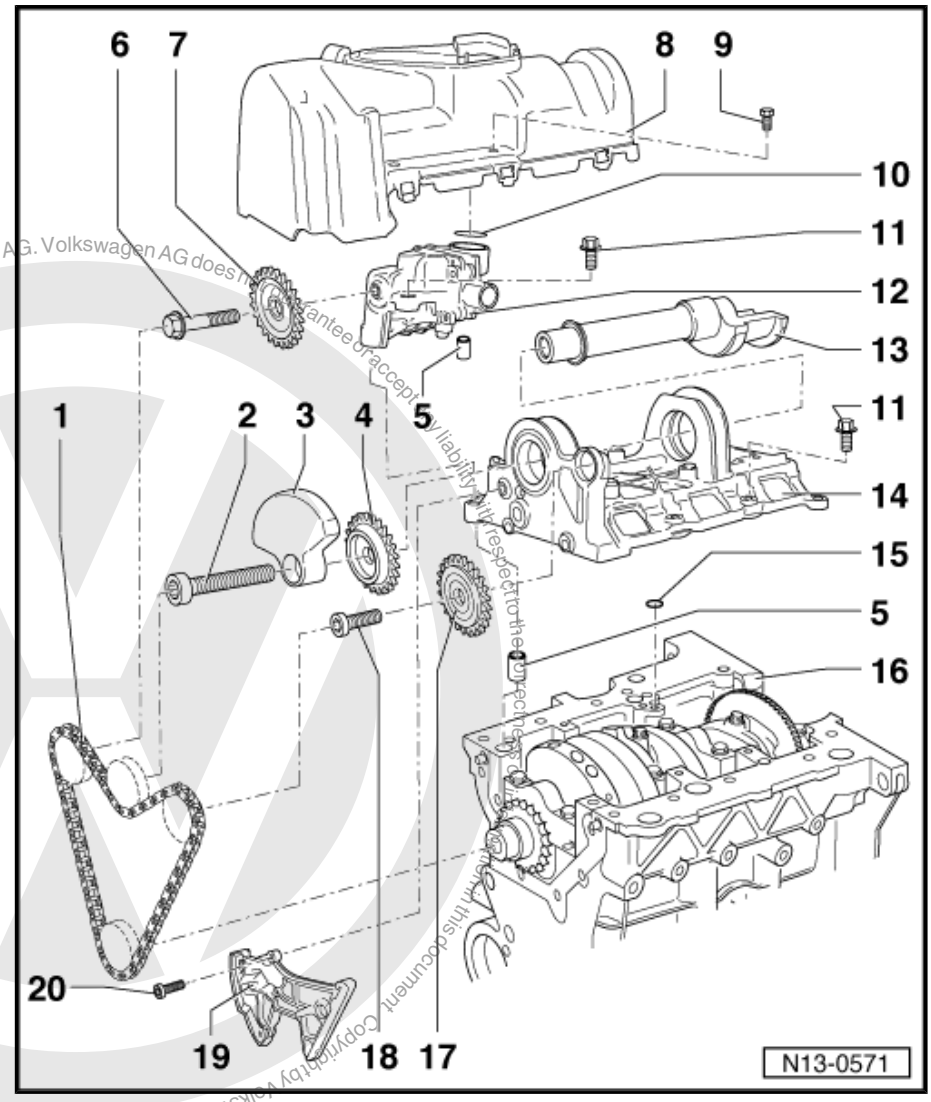

1 - Chain
- ❑ Note installation position ⇒ page 64 .

2 - 100 Nm + 1/4 turn (90°) further
- ❑ Renew
- ❑ Turning further can be done in several stages.
- ❑ Use counter-hold tool - T10061- to loosen and tighten

3 - Balance weight
- ❑ Can only be installed in one position

4 - Sprocket
- ❑ For balancer shaft.
- ❑ Can only be installed in one position

5 - Dowel sleeve

6 - 20 Nm + 1/4 turn (90°) further
- ❑ Renew

7 - Sprocket
- ❑ For oil pump.
- ❑ Can only be installed in one position

8 - Cover
- ❑ With sealing strip
- ❑ Clean strainer if dirty

9 - 5 Nm

10 - O-ring
- ❑ Renew
- ❑ Check for secure seating.
- ❑ Lightly oil before installing

11 - 20 Nm

12 - Oil pump
- ❑ With 11.5 bar pressure relief valve.
- ❑ Before installing, ensure that both dowel sleeves for centring are installed.

13 - Balancer shaft
- ❑ Removing and installing ⇒ page 64 .

Protected by copyright. Copying for private or commercial purposes, in part or in whole, is not permitted unless authorised by Volkswagen AG. Volkswagen AG does not guarantee or accept any liability with respect to the correctness of information in this document. Copyright by Volkswagen AG.
satelettronica

14 - Retaining frame

- ❑ Before installing, check that the dowel sleeves for centring oil pump on cylinder block are fitted and the O-ring is fitted in the retaining frame
- ❑ Removing and installing ⇒ page 64 .

15 - O-ring

- ❑ Renew
- ❑ Ensure securely seated in retaining frame

16 - Cylinder block

17 - Idler chain sprocket

18 - 20 Nm

19 - Chain tensioner with tensioning plate

- ❑ To remove, lock with locking pin -T10060 A-
- ❑ Removing and installing ⇒ page 64 .

20 - 8 Nm + 1/4 turn (90°) further

- ❑ Renew

3.2 Removing and installing balancer shaft

Special tools and workshop equipment required

- ♦ Mandrel -T10060 A-
- ♦ Special wrench, long reach -T10061-
- ♦ Torque wrench -V.A.G 1331-
- ♦ Torque wrench -V.A.G 1332-
- ♦ 24/27 mm spanner

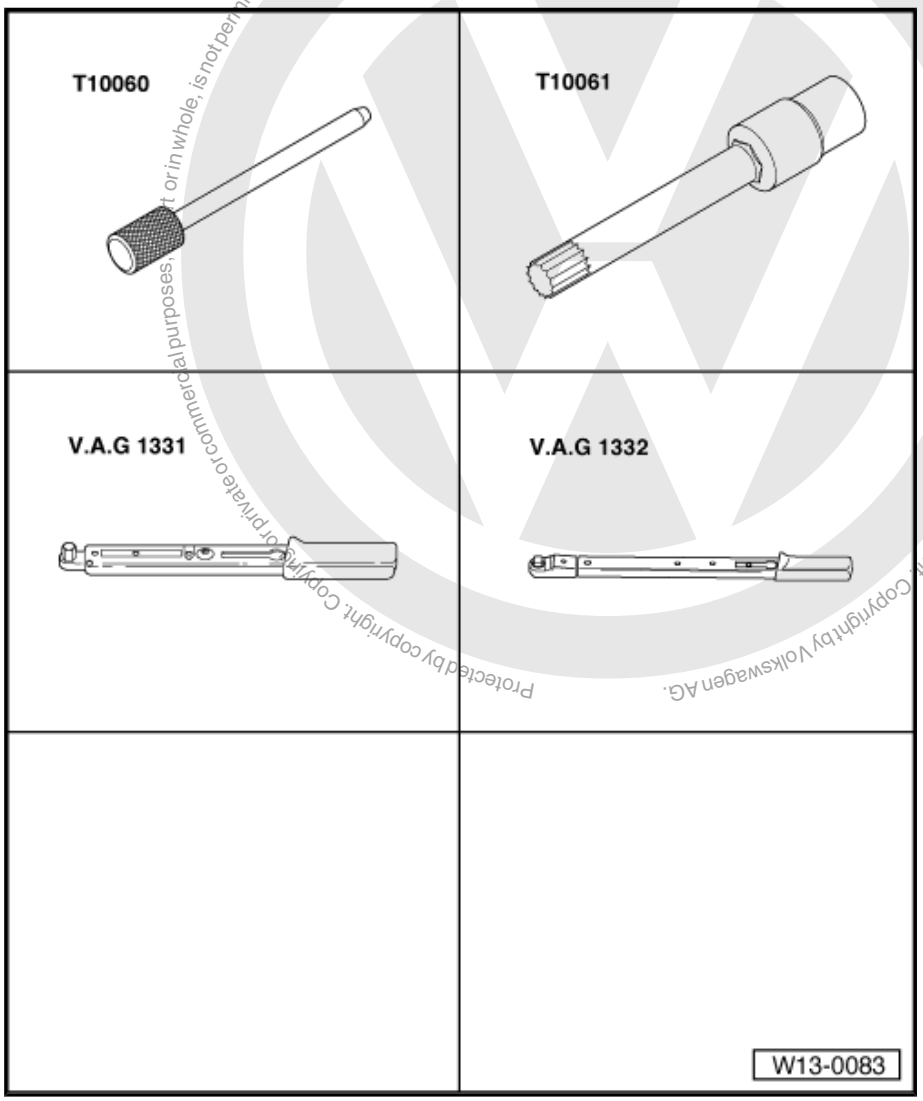

Protected by copyright. Copying for private or commercial purposes, in part or in whole, is not permitted unless authorised by Volkswagen AG. Volkswagen AG does not guarantee or accept any liability with respect to the correctness of information in this document. Copyright by Volkswagen AG.
satelettronica

Removing

- Remove poly V-belt ⇒ page 55 .
- Remove toothed belt ⇒ page 79 .
- Remove sump ⇒ page 109 .
- Remove sealing flange at belt pulley end ⇒ page 59 .
- Unscrew securing bolts for cover.
- Unclip cover from retaining frame.
- Lock chain tensioner using locking pin -T10060 A- -arrow-.
- Remove idler chain sprocket -1- from retaining frame.
- Remove securing bolts -2- from chain tensioner and remove chain tensioner.
- Remove chain from sprockets and place chain on a clean surface.

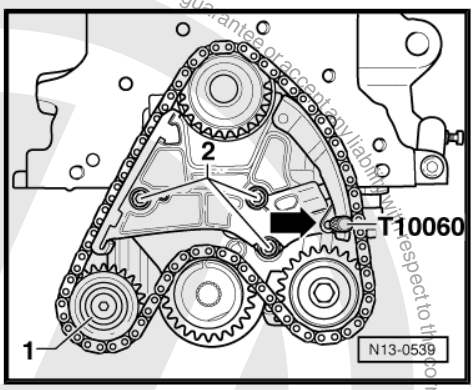

Protected by copyright. Copying for private or commercial purposes, in part or in whole, is not permitted unless authorised by Volkswagen AG. Volkswagen AG does not guarantee or accept any liability with respect to the correctness of information in this document. Copyright by Volkswagen AG.
satelettronica

– Lock balancer shaft using a 24/27 mm spanner -1-.

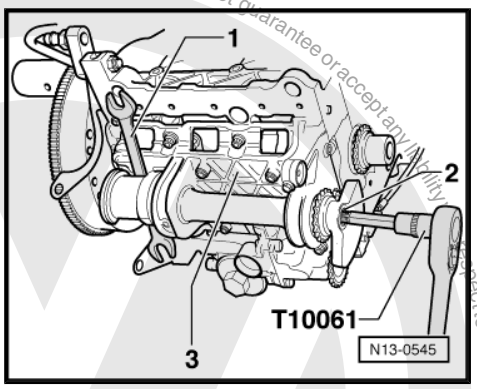

Note

The spanner must be positioned centrally to the balance weight and at right-angles to the balancer shaft.

– Loosen securing bolt -2- for balance weight.

Note

Only loosen securing bolt -2- for balance weight, do not remove.

– Unscrew retaining frame -3- from cylinder block and remove retaining frame together with balancer shaft.
– Place retaining frame on a clean surface.
– Remove securing bolt from balance weight.
– Remove balance weight and sprocket from balancer shaft.
– Turn balancer shaft so that the shaft can be taken out of the bearings.

Installing

– Lubricate running surfaces of bearings.
– Insert balancer shaft into the bearings.
– Fit sprocket and balance weight on balancer shaft.

Note

The sprocket and the balance weight can only be fitted in one position.

– Tighten securing bolt for balance weight and sprocket hand-tight.
– Bolt retaining frame hand-tight to cylinder block so that there is no play.

Note

♦ *Ensure when installing the retaining frame that the dowel sleeves are fitted in the cylinder block and the O-ring is fitted in the retaining frame.*
♦ *Align the retaining frame so that the belt pulley end is flush with the outer edge of the cylinder block.*

– Bolt retaining frame with balancer shaft to cylinder block. Torque setting: 20 Nm.
– Check that the belt pulley end of the retaining frame is aligned flush with the outer edge of the cylinder block

Protected by copyright. Copying for private or commercial purposes, in part or in whole, is not permitted unless authorised by Volkswagen AG. Volkswagen AG does not guarantee or accept any liability with respect to the correctness of information in this document. Copyright by Volkswagen AG.
satelettronica

Protected by copyright. Copying for private or commercial purposes, in part or in whole, is not permitted unless authorised by Volkswagen AG. Volkswagen AG does not guarantee or accept any liability with respect to the correctness of information in this document. Copyright by Volkswagen AG.

– Lock balancer shaft using a 24/27 mm spanner -1-.

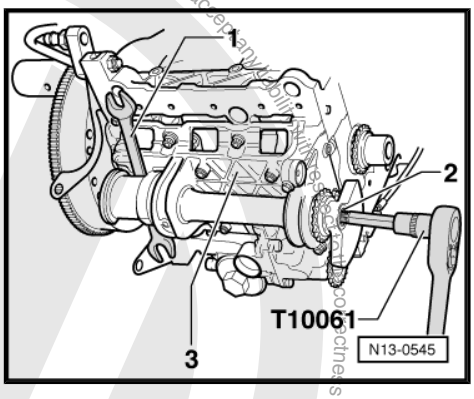

Note

The spanner must be positioned centrally to the balance weight and at right-angles to the balancer shaft.

– Tighten securing bolt -2- for balance weight. Torque setting: 100 Nm + $^{1}/_{4}$ turn (90°) further.

Note

Securing bolt is a stretch bolt and must always be renewed.

– Install chain tensioner, torque setting: 8 Nm + $^{1}/_{4}$ turn (90°) further.

Note

Securing bolts for chain tensioner are stretch bolts and must always be renewed.

– Clean chain using a lint-free cloth.

– Check marking -arrow- on crankshaft sprocket is at top.

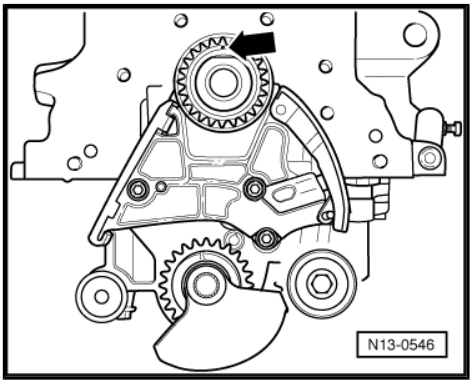

– Place chain on sprockets of crankshaft, oil pump and balancer shaft. Ensure the marks on the sprockets for the crankshaft and balancer shaft align with the coloured chain links -arrows- as shown.

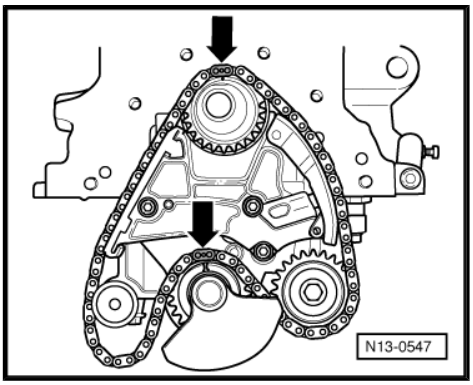

Note

The coloured chain links also have an additional raised portion.

– Fit the idler chain sprocket into the chain and bolt the idler chain sprocket to the retaining frame. Torque setting: 20 Nm.

– Remove locking pin -T10060 A- from chain tensioner.

satelettronica

– Check that the marks on the sprockets for the crankshaft and balancer shaft align with the coloured chain links -arrows-.

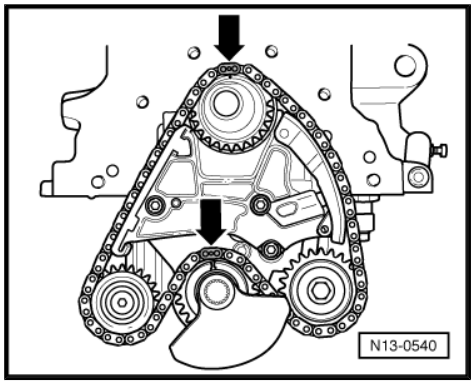

Note

The coloured chain links also have an additional raised portion.

– Install sealing flange at belt pulley end ⇒ page 59 .
– Install cover for balancer shaft. Torque setting: 5 Nm.

Note

- *Before installing cover, oil O-ring for oil pump and seat on inside of cover.*
- *Ensure the sealing strip is seated correctly in the cover.*
- *When installing, ensure the cover engages in the retaining frame*

– Install sump ⇒ page 109 .
– Install and tension toothed belt ⇒ page 79 .
– Install poly V-belt ⇒ page 55 .

Protected by copyright. Copying for private or commercial purposes, in part or in whole, is not permitted unless authorised by Volkswagen AG. Volkswagen AG does not guarantee or accept any liability with respect to the correctness of information in this document. Copyright by Volkswagen AG.
satelettronica

4 Removing and installing crankshaft

Note

- *Before removing crankshaft, ensure that a suitable surface for storing crankshaft is prepared so that sender wheel (⇒ Item 5 (page 69)) does not contact anything and cannot be damaged.*
- *All bearing and running surfaces must be oiled before assembly.*

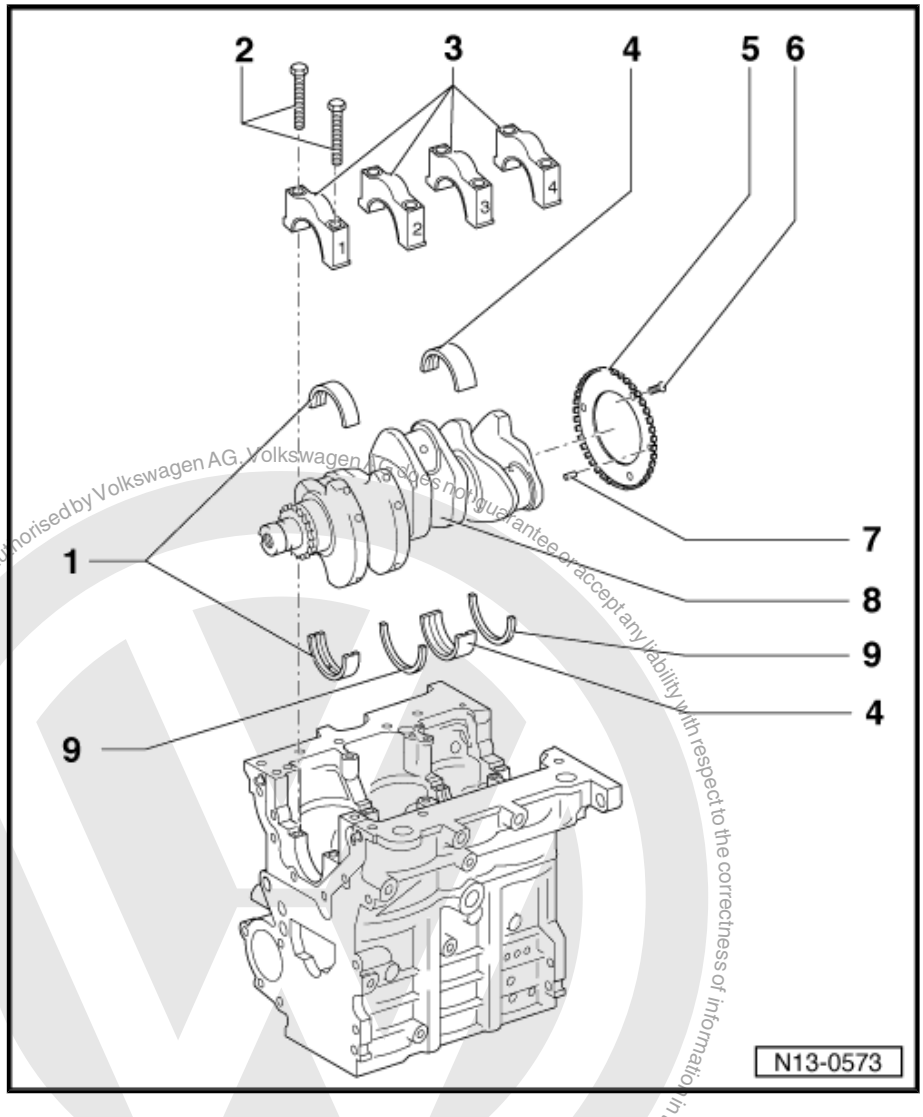

1 - Bearing shells 1, 2 and 4

- ❑ For bearing cap without oil groove.
- ❑ For cylinder block with oil groove
- ❑ Do not interchange used bearing shells (mark).

2 - 65 Nm + 1/4 turn (90°) further

- ❑ Renew
- ❑ To measure radial clearance, tighten to 65 Nm but not further.

3 - Bearing cap

- ❑ Bearing cap 1: belt pulley end.
- ❑ Bearing shell retaining lugs in cylinder block and bearing caps must align.

4 - Bearing shell 3

- ❑ For bearing cap without oil groove.
- ❑ For cylinder block with oil groove

5 - Sender wheel

- ❑ For speed sender
- ❑ Renew if damaged.

6 - 10 Nm + 1/4 turn (90°) further

- ❑ Renew

7 - Dowel pin

- ❑ Check projection from crankshaft ⇒ page 70

8 - Crankshaft

- ❑ Before removing, see note ⇒ page 69
- ❑ Axial clearance.
- ❑ New: 0.07…0.17 mm
- ❑ Wear limit: 0.37 mm
- ❑ Check radial clearance with Plastigage.

Protected by copyright. Copying for private or commercial purposes, in part or in whole, is not permitted unless authorised by Volkswagen AG. Volkswagen AG does not guarantee or accept any liability with respect to the correctness of information in this document. Copyright by Volkswagen AG.
satelettronica

- New: 0.03…0.08 mm
- Wear limit: 0.17 mm
- Do not rotate crankshaft when checking radial clearance.
- Crankshaft dimensions ⇒ page 70 .

9 - Thrust washer

- For cylinder block, bearing 3

Checking dowel pin projection out of crankshaft

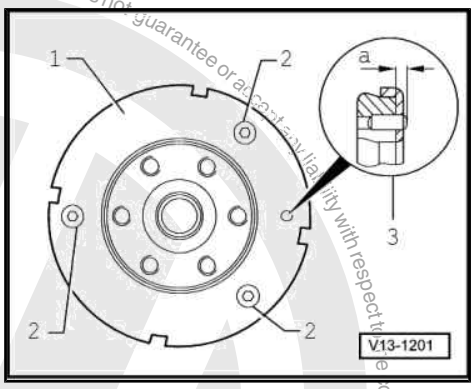

Special tools and workshop equipment required

- Depth gauge

Test procedure

– Use depth gauge to check fitted pin projection -a- with sender wheel -1- removed.

1 - Sender wheel

2 - Securing bolt

3 - Projection of fitted pin -3- out of crankshaft a = 2.5...3.0 mm

4.1 Crankshaft dimensions

(dimensions in mm)

Honing dimension	Crankshaft main journal ∅		Conrod journal ∅	
Basic dimension	54.00	-0.022 -0.042	47.80	-0.022 -0.042
1st oversize	53.75	-0.022 -0.042	47.55	-0.022 -0.042
2nd oversize	53.50	-0.022 -0.042	47.30	-0.022 -0.042
3rd oversize	53.25	-0.022 -0.042	47.05	-0.022 -0.042

Protected by copyright. Copyright by Volkswagen AG. Volkswagen AG does not guarantee or accept any liability with respect to the correctness of information in this document. Copyright by Volkswagen AG. Copyright by Volkswagen AG, in part or in whole, is not permitted unless authorised for commercial purposes or private or commercial purposes.
satelettronica

5 Pistons and conrods

Note

All bearing and running surfaces must be oiled before assembly.

5.1 Assembly overview - pistons and conrods

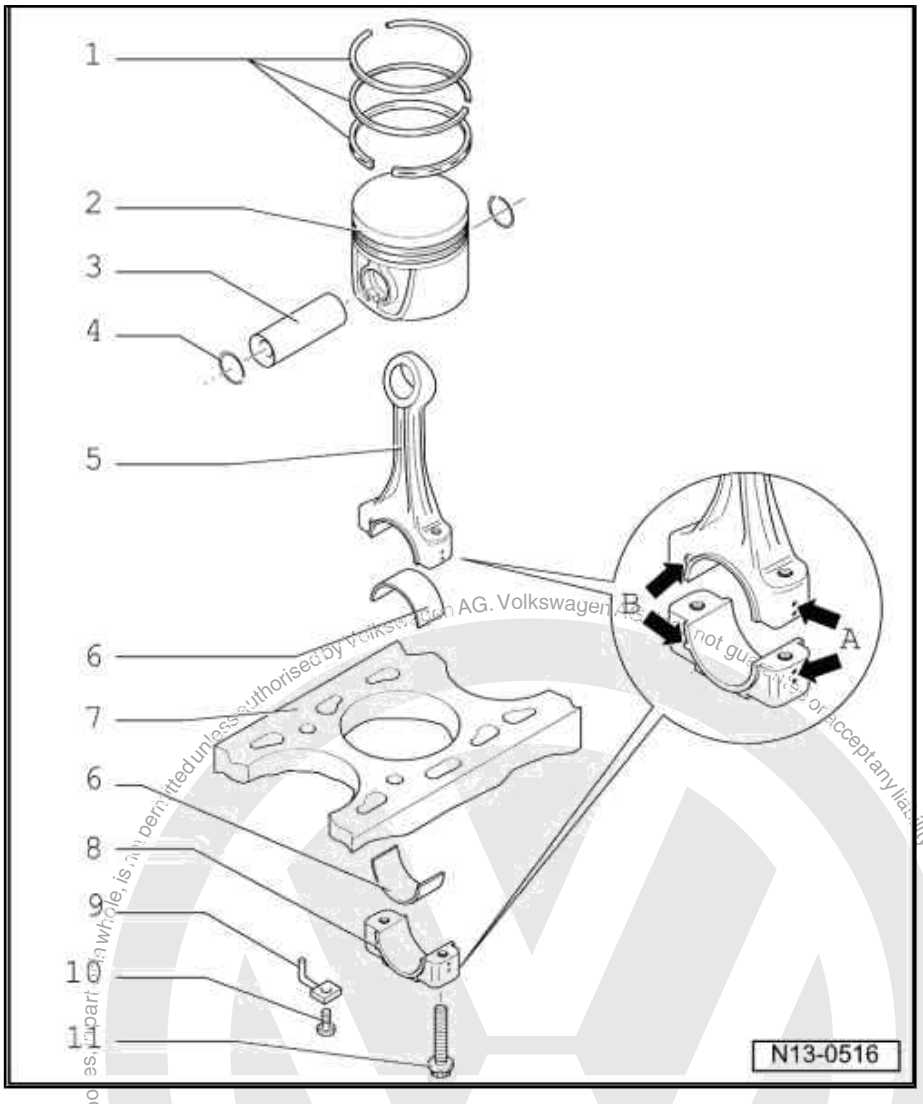

1 - Piston rings

- ❑ Offset gaps by 120°
- ❑ Remove and install using piston ring pliers.
- ❑ "TOP" faces towards piston crown.
- ❑ Checking ring gap ⇒ page 72
- ❑ Checking ring-to-groove clearance ⇒ page 72

2 - Piston

- ❑ With combustion chamber.
- ❑ Mark installation position and cylinder number.
- ❑ Installation position and allocation of piston to cylinder ⇒ page 73 .
- ❑ Arrow on piston crown points to pulley end.
- ❑ Install using piston ring clamp.
- ❑ If piston skirt is cracked, renew piston.
- ❑ Checking piston projection at TDC ⇒ page 73 .

3 - Piston pin

- ❑ If difficult to remove, heat piston to 60 °C.
- ❑ Remove and install with drift -VW 222 A- .

4 - Circlip

5 - Conrod

- ❑ Renew as set only.
- ❑ Mark with cylinder number -A-.
- ❑ Installation position: Marking -B- faces towards pulley end.

6 - Bearing shell

- ❑ Note installation position.
- ❑ Upper bearing shell (towards piston) made of a more wear resistant material.
- ❑ Identification: Black line on bearing surface in area of joint
- ❑ Do not interchange used bearing shells.
- ❑ Insert bearing shells centrally.

satelettronica
Protected by copyright. Copying for private or commercial purposes, in part or in whole, is not permitted unless authorised by Volkswagen AG. Volkswagen AG does not guarantee or accept any liability with respect to the correctness of information in this document. Copyright by Volkswagen AG.

- ❑ Outer edge of bearing shell to outer edge of conrod/conrod cap 2.5 mm, measured from one side.
- ❑ Check for secure seating.
- ❑ Axial clearance, wear limit: 0.37 mm
- ❑ Check radial clearance with Plastigage, wear limit: 0.08 mm.
- ❑ Do not rotate crankshaft when checking radial clearance

7 - Cylinder block

- ❑ Checking cylinder bores ⇒ page 73 .
- ❑ Piston and cylinder dimensions ⇒ page 75 .

8 - Conrod bearing cap

- ❑ Note installation position.

9 - Oil spray jet

- ❑ For piston cooling.
- ❑ Note installation position: turn oil spray jet anti-clockwise onto stop in cylinder block and tighten in this position

10 - 25 Nm

- ❑ Insert without sealant.

11 - Conrod bolt, 30 Nm + 1/4 turn (90°) further

- ❑ Renew
- ❑ Lubricate threads and contact surface
- ❑ First tighten evenly to 5 Nm.
- ❑ Use old bolt for measuring radial clearance

Protected by copyright. Copying for private or commercial purposes, in part or in whole, is not permitted unless authorised by Volkswagen AG. Volkswagen AG does not guarantee or accept any liability with respect to the correctness of information in this document. Copyright by Volkswagen AG.

Checking piston ring gap

– Push ring squarely from above down to approx. 15 mm from bottom end of cylinder.

Piston ring dimensions in mm	New	Wear limit
1st compression ring	0.25…0.40	1.0
2nd compression ring	0.20…0.40	1.0
Oil scraper ring	0.25…0.50	1.0

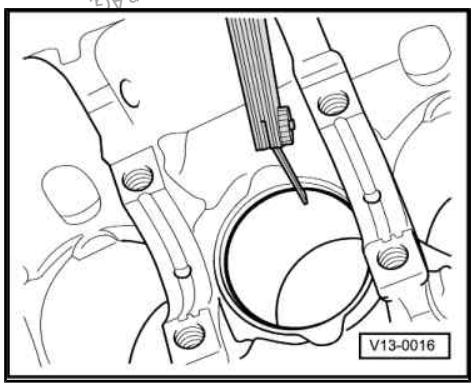

Checking ring-to-groove clearance

– Clean groove in piston before checking clearance.

Piston ring dimensions in mm	New	Wear limit
1st compression ring	0.06…0.09	0.25
2nd compression ring	0.05…0.08	0.25
Oil scraper ring	0.03…0.06	0.15

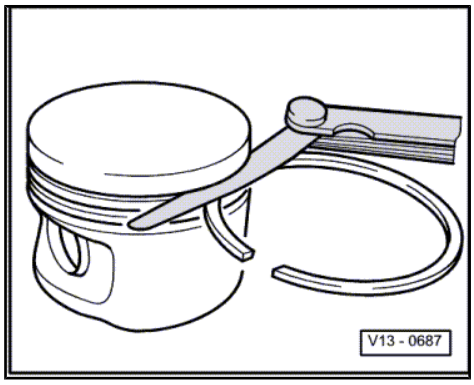

satelettronica

Protected by copyright. Copying for private or commercial purposes, in part or in whole, is not permitted unless authorised by Volkswagen AG. Volkswagen AG does not guarantee or accept any liability with respect to the correctness of information in this document. Copyright by Volkswagen AG.

Checking cylinder bores

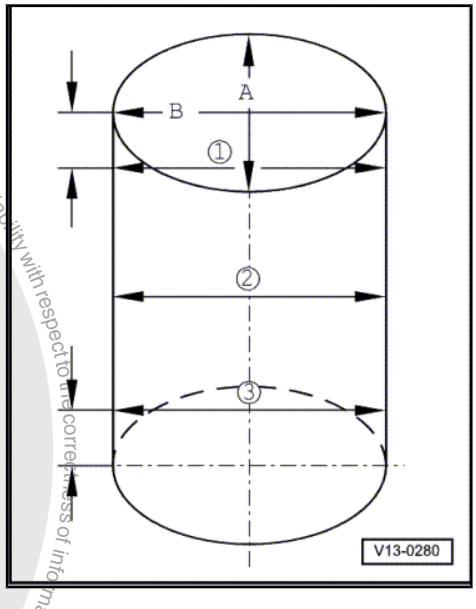

Special tools and workshop equipment required

- ♦ Internal dial test indicator 50..100 mm
- – Take measurements at 3 positions in both lateral -A-and longitudinal -B- directions, as illustrated.

Deviation from nominal dimension max. 0.10 mm

Note

Cylinder bores must not be measured when cylinder block is mounted on a repair stand with engine and gearbox support -VW 540- , as measurements may then be incorrect.

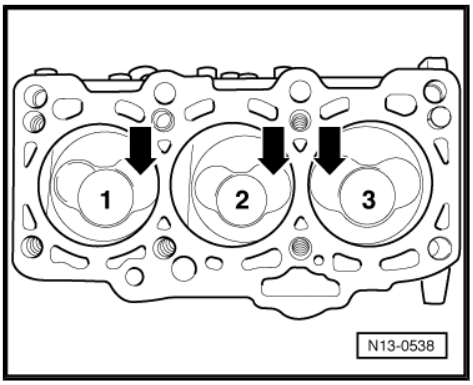

Piston installation position and allocation of piston to cylinder.

Piston in cylinders 1 and 2:

Larger inlet valve recess -arrows- towards flywheel.

Piston in cylinder 3:

Larger inlet valve recess -arrow- towards belt pulley end.

Note

- ♦ *New piston allocation to cylinders is shown by a coloured marking on piston crown.*
- ♦ *Piston for cylinders 1 and 2: marked 1/2*
- ♦ *Piston for cylinder 3: marked 3*

5.2 Checking piston projection at TDC

Special tools and workshop equipment required

satelettronica

Protected by copyright. Copying for private or commercial purposes, in part or in whole, is not permitted unless authorised by Volkswagen AG. Volkswagen AG does not guarantee or accept any liability with respect to the correctness of information in this document. Copyright by Volkswagen AG.

- Measuring bridge -VW 382/7-

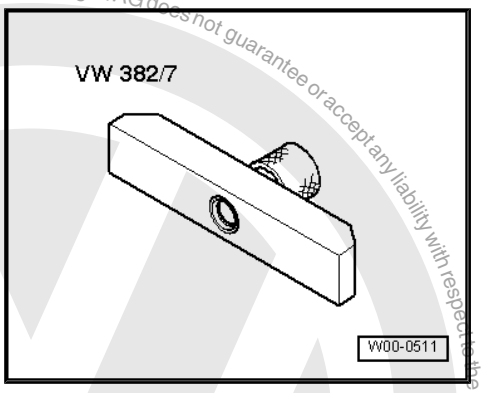

- End dimension plate -VW 385/17-

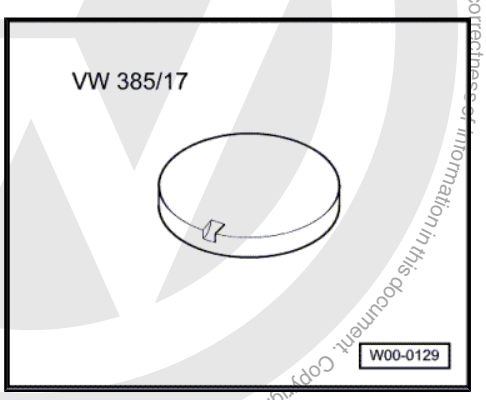

Test procedure

Piston projection at TDC must be measured when installing new pistons or a short engine. Install the appropriate cylinder head gasket depending upon piston projection, according to following table:

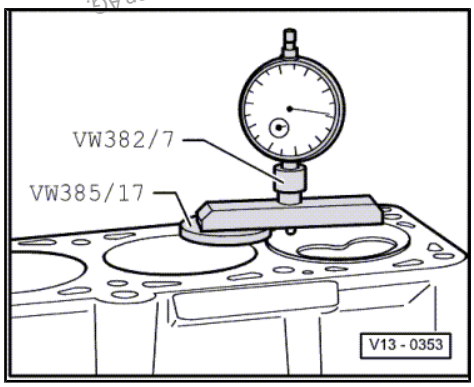

Note

Turn engine clockwise to measure piston projection at TDC.

Piston projection	Identification Holes/notches
0.91 mm … 1.00 mm	1
1.01 mm … 1.10 mm	2
1.11 mm … 1.20 mm	3

5.2.1 Cylinder head gasket identification

- Part No. = -arrow 1-
- Production control code = -arrow 2- (disregard)
- Holes = -arrow 3-

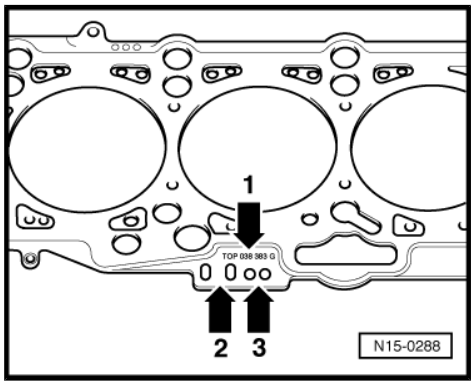

Note

If different values are determined during the projection measurement, use the largest dimension for selecting the gasket.

satelettronica

5.3 Piston and cylinder dimensions

Honing dimension		Piston ∅	Cylinder bore ∅
Basic dimension	mm	79.47	79.51
1st oversize	mm	79.97	80.01

Protected by copyright. Copying for private or commercial purposes, in part or in whole, is not permitted unless authorised by Volkswagen AG. Volkswagen AG does not guarantee or accept any liability with respect to the correctness of information in this document. Copyright by Volkswagen AG.

satelettronica

15 – Cylinder head, valve gear

1 Cylinder head

Checking compression ⇒ page 87

Note

- *When installing an exchange cylinder head with fitted camshaft, the contact surfaces between the bucket tappets and the cam must be oiled before installing the cylinder head cover.*
- *All bearing and running surfaces must be oiled before assembly.*
- *The plastic packing pieces for protecting the open valves must not be removed until immediately before fitting cylinder head.*
- *If the cylinder head is renewed, all the coolant in the system must also be renewed.*

1.1 Assembly overview - cylinder head

1 - Toothed belt guard upper part

2 - Toothed belt

- ❑ Mark direction of rotation before removing.
- ❑ Check for wear.
- ❑ Do not kink.
- ❑ Removing, installing and tensioning ⇒ page 79 .

3 - 10 Nm

4 - 25 Nm

5 - 100 Nm

6 - Camshaft toothed belt pulley

7 - Hub

- ❑ With sender wheel.
- ❑ Use counter-hold tool -T10051- to loosen and tighten.
- ❑ To remove, use puller -T10052- .
- ❑ Removing and installing ⇒ page 97 .

8 - Rear toothed belt guard

9 - Sealing grommet

- ❑ Renew if damaged.

10 - Hall sender -G40-

- ❑ For camshaft position
- ❑ To remove sealing

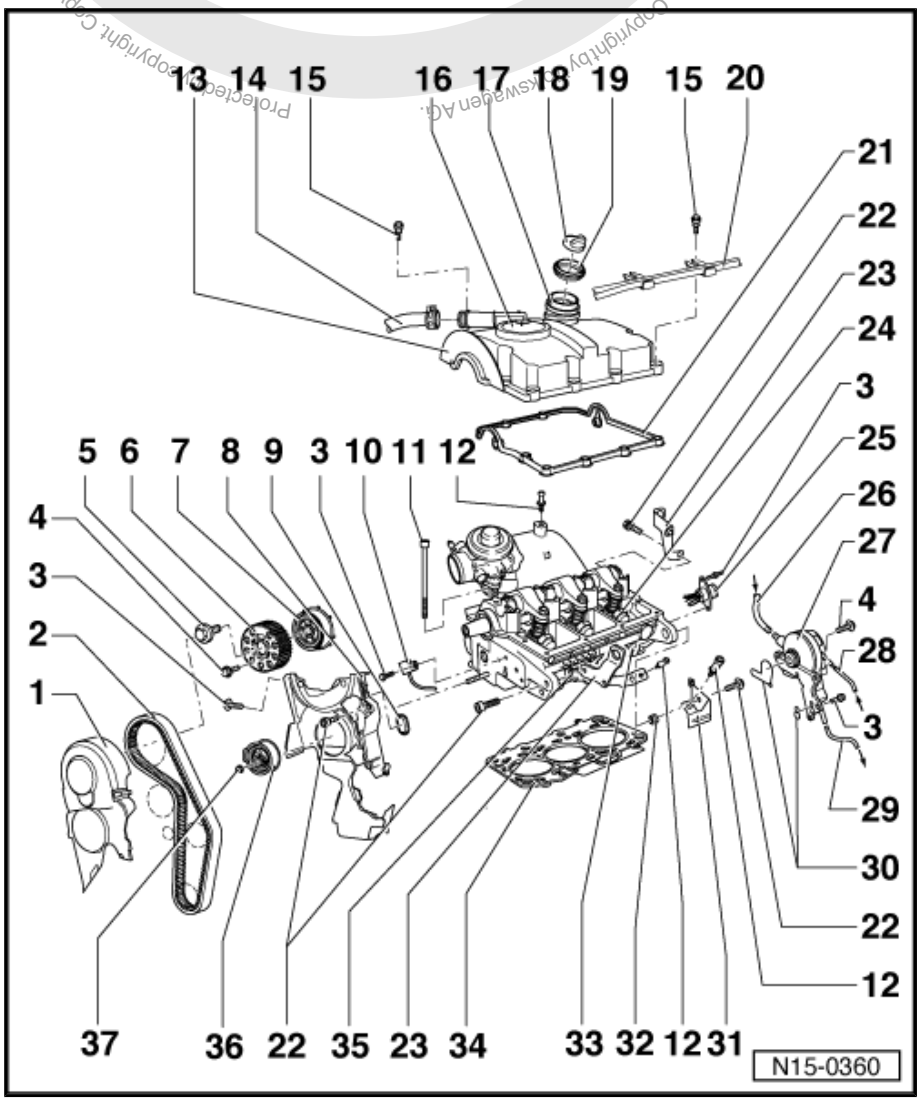

satelettronica

grommet
⇒ Item 9 (page 76) , unbutton from toothed belt guard.
- ❑ Checking ⇒ page 181

11 - Cylinder head bolt
- ❑ Renew
- ❑ Observe sequence when loosening and tightening ⇒ page 84 .
- ❑ Before installing, place washers in cylinder head ⇒ Item 4 (page 90) .

12 - Pin, 10 Nm
- ❑ For engine cover.

13 - Cylinder head cover
- ❑ With oil filler neck
- ❑ If cylinder head cover is damaged, renew along with oil filler neck
- ❑ Before fitting, thoroughly clean sealing surface of cylinder head with clean cloth.

14 - To turbocharger.

15 - 10 Nm
- ❑ First hand tighten all bolts.
- ❑ Then, first tighten both upper bolts and then tighten the remainder to prescribe torque setting working from inside to outside using diagonal sequence

16 - Pressure control valve
- ❑ For crankcase breather.

17 - Oil filler neck
- ❑ Renew

18 - Cap
- ❑ Renew seal if damaged

19 - Seal
- ❑ Renew if damaged.

20 - Bracket
- ❑ With fuel lines

21 - Cylinder head cover gasket
- ❑ Renew if damaged.

22 - 20 Nm

23 - Lifting eye

24 - Unit injector
- ❑ Removing and installing ⇒ page 159 .

25 - Central connector
- ❑ For unit injector.

26 - From brake servo

27 - Tandem pump
- ❑ For fuel and vacuum supply.
- ❑ Removing and installing ⇒ page 139 .
- ❑ Checking ⇒ page 137

28 - Supply hose
- ❑ From fuel filter ⇒ Item 10 (page 127)
- ❑ White or with white marking.
- ❑ Check for secure seating.
- ❑ Secure with spring-type clips.

Protected by copyright. Copying for private or commercial purposes, in part or in whole, is not permitted unless authorised by Volkswagen AG. Volkswagen AG does not guarantee or accept any liability with respect to the correctness of information in this document. Copyright by Volkswagen AG.
satelettronica

Protected by copyright. Copying for private or commercial purposes, in part or in whole, is not permitted unless authorised by Volkswagen AG. Volkswagen AG does not guarantee or accept any liability with respect to the correctness of information in this document. Copyright by Volkswagen AG.

satelettronica

29 - Return hose

- ❑ To fuel filter ⇒ Item 6 (page 127) .
- ❑ Blue or with blue marking.
- ❑ Check for secure seating.
- ❑ Secure with spring-type clips.

30 - Seal

- ❑ Renew

31 - Bracket

32 - Hexagon nut with cone

33 - Cylinder head

- ❑ Removing and installing ⇒ page 84
- ❑ If renewed, change coolant in entire system

34 - Cylinder head gasket

- ❑ Renew
- ❑ Note marking ⇒ page 78
- ❑ If renewed, change coolant in entire system

35 - Glow plug

- ❑ 15 Nm
- ❑ Checking ⇒ page 203

36 - Tensioning roller

37 - 20 Nm + $^{1}/_{8}$ turn (45°) further

Checking cylinder head for distortion

Max. permissible distortion: 0.1 mm.

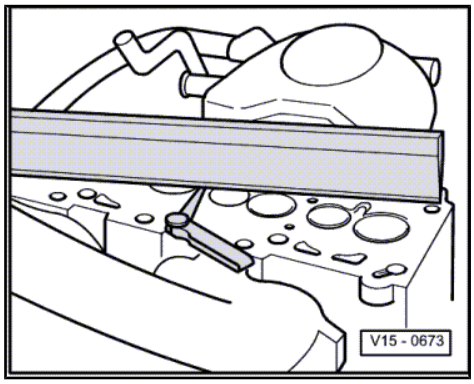

Note

Reworking diesel cylinder heads is not permissible.

Cylinder head gasket identification

- ♦ Part No. = -arrow 1-
- ♦ Production control code = -arrow 2- (disregard)
- ♦ Holes = -arrow 3-

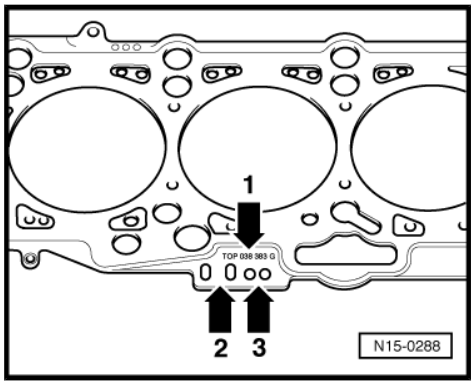

Note

Different thicknesses of cylinder head gasket are fitted depending on the piston projection. When renewing cylinder head gasket, install new gasket with same identification.

1.2 Removing, installing and tensioning toothed belts

Special tools and workshop equipment required

- Locking pin for diesel injection pump -3359-
- Pin wrench -3387-
- Locking plate -T10008-
- Crankshaft stop -T10050-
- Torque wrench -V.A.G 1331-
- Torque wrench -V.A.G 1332-

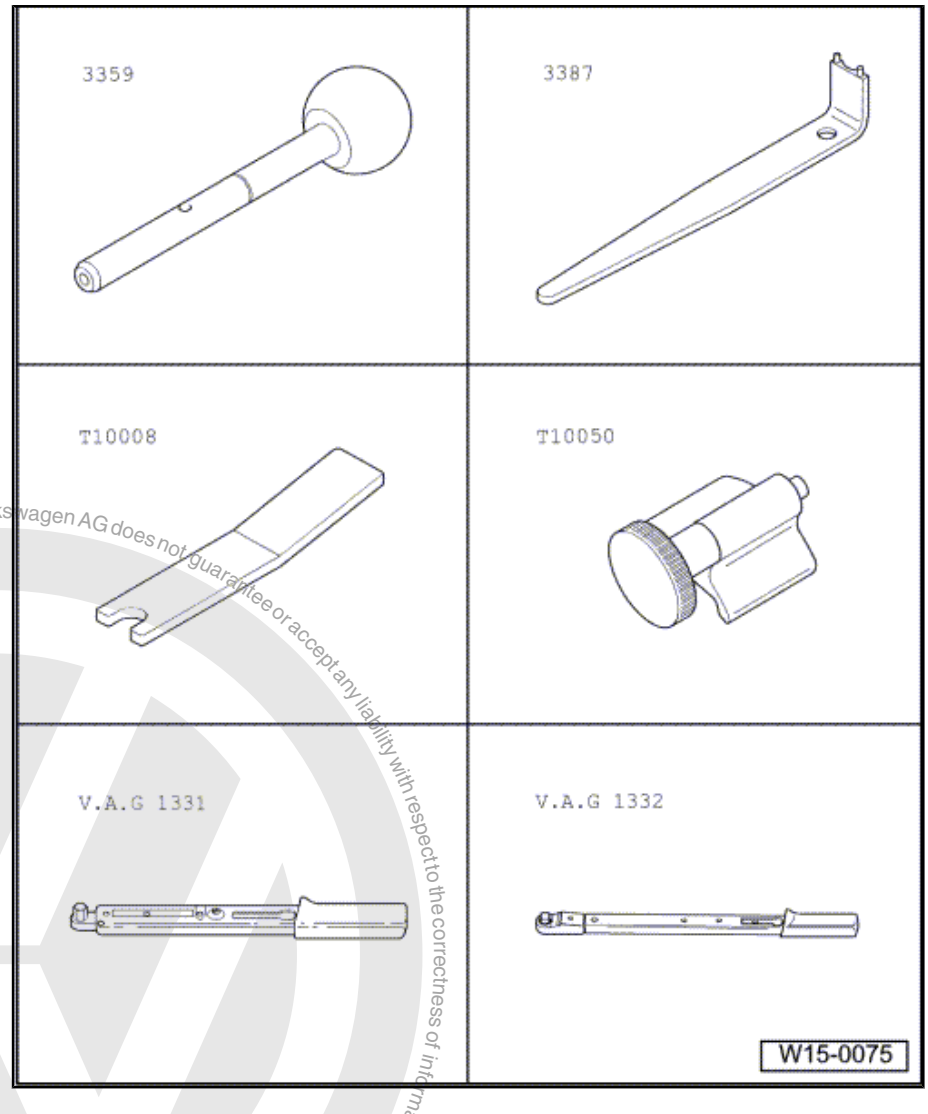

Protected by copyright. Copying for private or commercial purposes, in part or in whole, is not permitted unless authorised by Volkswagen AG. Volkswagen AG does not guarantee or accept any liability with respect to the correctness of information in this document. Copyright by Volkswagen AG.
satelettronica

- Support bracket -10 - 222 A- with rack -10 - 222 A /1-
- Drill bit, ∅ 4 mm

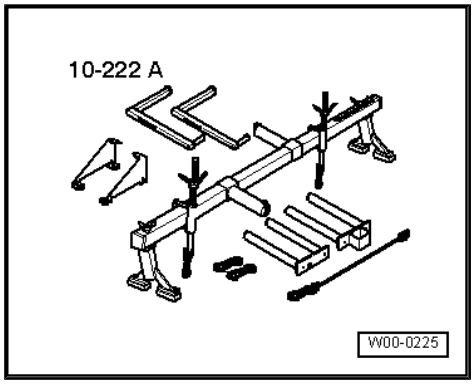

Removing

Note

Always perform adjustment work on toothed belts only on cold engines.

– Remove engine cover.
– Remove connecting pipe between charge air cooler and intake connection.
– Remove air mass meter.
– Remove noise insulation tray ⇒ Rep. Gr. 50 .
– Unbolt pendulum support from gearbox.
– Remove poly V-belt ⇒ page 55 .
– Remove tensioning element for poly-V-belt.
– Remove toothed belt guard upper part.
– Detach fuel line from cylinder head cover.

– Fit support bracket -10 - 222 A- as shown and support engine in installation position.

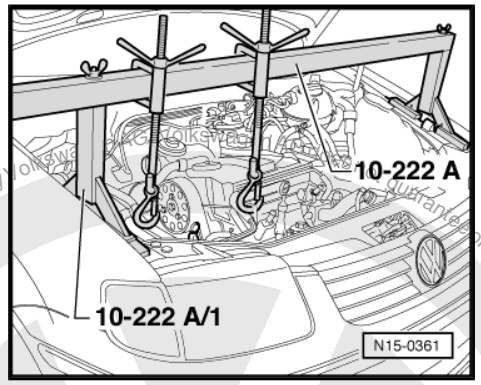

– Remove bolts from engine assembly mounting -arrows- and remove complete assembly mounting.
– Remove engine bracket from cylinder head.
– Remove centre toothed belt guard.
– Lower engine carefully so that the vibration damper/belt pulley can be removed.
– Remove lower toothed belt guard.
– Turn crankshaft to TDC No. 1 cylinder.

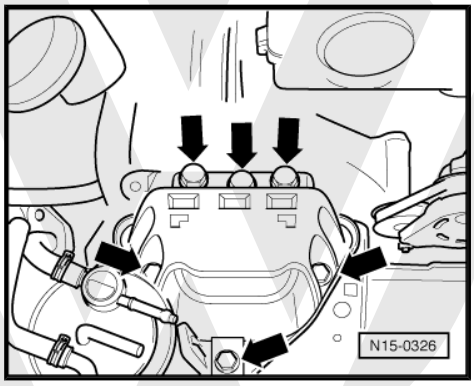

satelettronica
Protected by copyright. Copying for private or commercial purposes, in part or in whole, is not permitted unless authorised by Volkswagen AG. Copyright by Volkswagen AG. We do not accept any liability with respect to the correctness of information in this document.

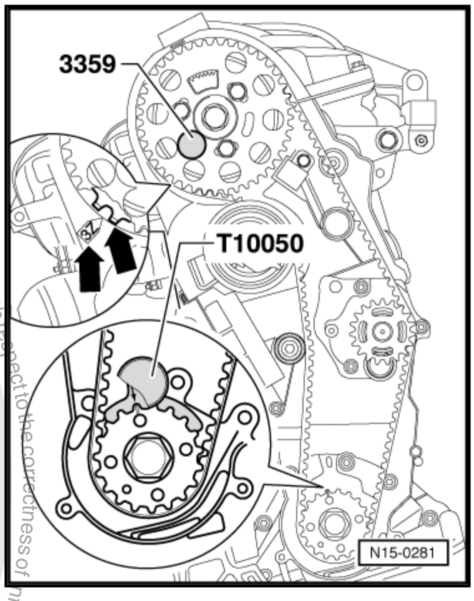

Note

Turn the crankshaft until the mark on the crankshaft pulley is facing up and the arrow on the rear toothed belt guard aligns with the lug on the hub sender wheel -arrows-.

– Lock the hub using locking pin for diesel injection pump -3359- . To do this, slide diesel injection pump locking pin -3359- through the free elongated hole on left into hole in cylinder head.

– Lock crankshaft toothed belt pulley with crankshaft stop -T10050- . To do this, slide crankshaft stop -T10050- from face side of toothed belt pulley into teeth.

Note

The marks on the crankshaft toothed belt pulley and the crankshaft stop -T10050- must align. At the same time, the pin of the crankshaft stop -T10050- must engage in the drilling in the sealing flange.

– Mark direction of rotation of toothed belt.

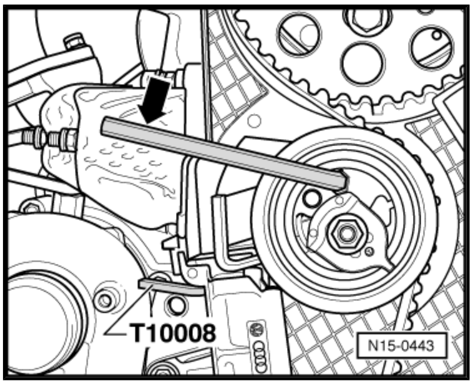

– Insert a hexagon key into the hexagon hole onto stop and use it to press the tensioning roller anti-clockwise in -direction of arrow- until the toothed belt tensioning device can be locked with the locking plate -T10008- .

Note

If the hexagon key is not inserted deeply enough there is a risk of it slipping out.

– Loosen tensioning roller securing nut.

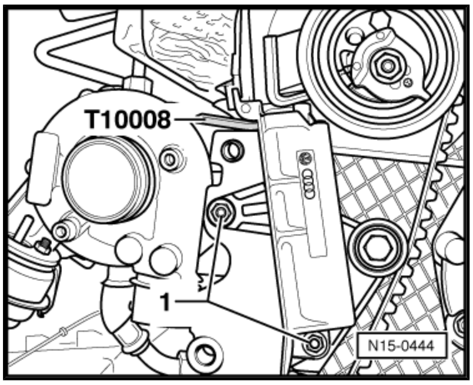

– Unscrew and remove securing bolts -1- of toothed belt tensioner and remove tensioning element.

– Remove toothed belt.

Installing

Note

Always perform adjustment work on toothed belts only on cold engines.

Protected by copyright. Copying for private or commercial purposes, in part or in whole, is not permitted unless authorised by Volkswagen AG. Volkswagen AG does not guarantee or accept any liability with respect to the correctness of information in this document. Copyright by Volkswagen AG.
satelettronica

– Loosen securing bolts -1- of camshaft toothed belt pulley until camshaft pulley can be moved within the elongated holes.

– Turn camshaft pulley clockwise -direction of arrow- in elongated holes onto stop.

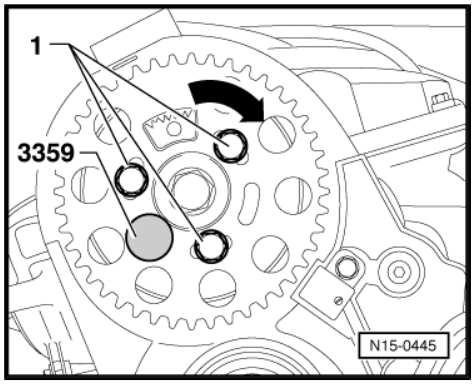

– Now carefully turn eccentric clockwise using pin wrench -3387- until eccentric lug lies directly before limit stop -B-.

– Fit toothed belt on camshaft toothed belt pulley, belt tensioner, crankshaft toothed belt pulley and finally water pump toothed belt pulley.

– Install toothed belt tensioning device.

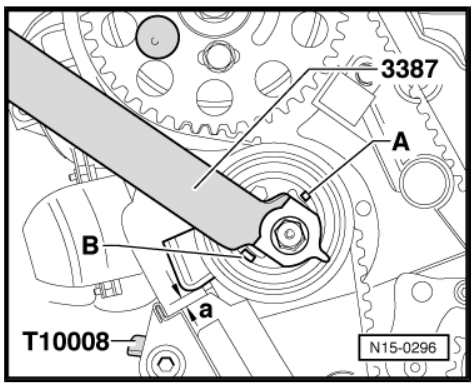

– Turn eccentric anti-clockwise using pin wrench -3387- (lug of eccentric moves in direction of limit stop -A-), until the locking plate -T10008- is not under tension and can be pulled out.

– Release force of tensioning element in clockwise direction (lug of eccentric moves towards stop -B-) until dimension -a- has been attained.

Specification dimension -a-: 4 ± 1 mm

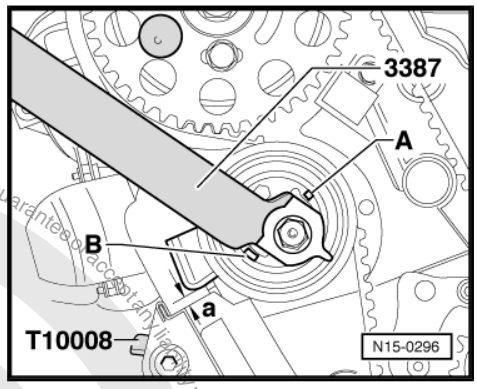

Note

- *Measurement -a- reduces when the tensioning roller securing nut is tightened. Therefore adjust generously using ∅ 4 mm drill bit.*
- *Measurement -a- may be reduced to 1 mm if engine is at operating temperature.*

– Hold tensioning roller in this position and tighten tensioning roller securing nut as follows: 20 Nm and 45° (1/8 turn) further.

Protected by copyright. Copying for private or commercial purposes, in part or in whole, is not permitted unless authorised by Volkswagen AG. Volkswagen AG does not guarantee or accept any liability with respect to the correctness of information in this document. Copyright by Volkswagen AG.

satelettronica

– Tighten securing bolts -1- of camshaft pulley to 25 Nm.

– Remove locking pin for diesel injection pump -3359- and crankshaft stop -T10050- .

– Turn crankshaft two rotations in engine direction of rotation and set again to TDC No. 1 cylinder.

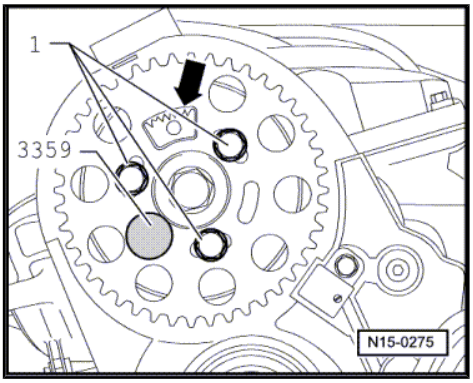

Note

- *When doing this, the pin of the crankshaft stop -T10050- must engage in the sealing flange from the rotational movement.*
- *If the crankshaft is turned past TDC No. 1 cylinder and the crankshaft stop -T10050- could not engage in the sealing flange, turn the crankshaft back 1/4 turn to be able to turn the crankshaft in engine direction of rotation again to set it to TDC No. 1 cylinder. Corrections to the position by turning against engine direction of rotation in order to insert the crankshaft stop -T10050- are not permissible.*

– Once the crankshaft stop -T10050- has engaged, check whether: 1. dimension -a- is reached and 2. the hub can be locked using locking pin for diesel injection pump -3359- .

If dimension -a- is not attained:

– Tension the tensioning roller again. To do this, hold tensioning roller with 2-hole pin wrench -3387- , loosen securing nut and release force of tensioning device until dimension -a- is attained.

Specification dimension -a-: 4 ± 1 mm

– Tighten securing nut to 20 Nm and 45° (1/8 turn) further.

If the hub cannot be locked:

– Pull the crankshaft stop -T10050- pin out of the drilling in the sealing flange and turn the crankshaft until the hub can be locked with the locking pin for diesel injection pump -3359- .

– Loosen securing bolts -1- of camshaft pulley.

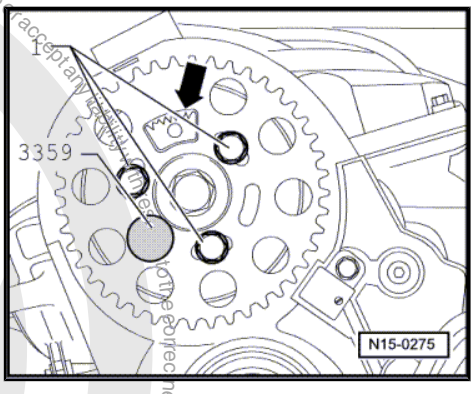

Protected by copyright. Copying for private or commercial purposes, in part or in whole, is not permitted unless authorised by Volkswagen AG. Volkswagen AG does not guarantee or accept any liability with respect to the correctness of information in this document. Copyright by Volkswagen AG.
satelettronica

– Turn crankshaft slightly against engine direction of rotation until the pin of the crankshaft stop -T10050- is positioned just before the hole in the sealing flange -arrow-.
– Now turn crankshaft in engine direction of rotation until pin of crankshaft stop -T10050- engages in sealing flange from rotational movement.
– Tighten securing bolts of camshaft belt pulley to 25 Nm.
– Remove locking pin for diesel injection pump -3359- and crankshaft stop -T10050- .
– Turn crankshaft two rotations in engine D.O.R. until crankshaft is set to TDC No. 1 cylinder again.

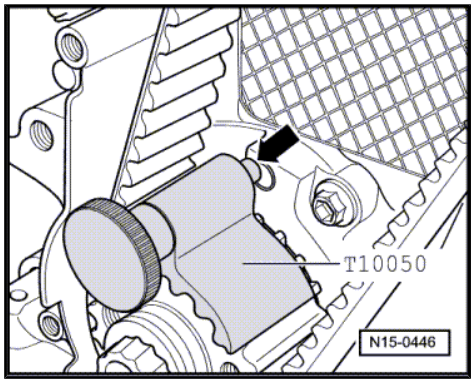

Note

- *When doing this, the pin of the crankshaft stop -T10050- must engage in the sealing flange from the rotational movement.*
- *If the crankshaft is turned past TDC No. 1 cylinder and the crankshaft stop -T10050- could not engage in the sealing flange, turn the crankshaft back 1/4 turn to be able to turn the crankshaft in engine direction of rotation again to set it to TDC No. 1 cylinder. Corrections to the position by turning against engine direction of rotation in order to insert the crankshaft stop -T10050- are not permissible.*

– Repeat check.
– Install lower toothed belt guard and pulley vibration damper.
– Install centre toothed belt guard.
– Fit engine bracket to cylinder block. Torque setting: 45 Nm.
– Install engine mounting. Torque settings ⇒ page 48 .
– Install poly V-belt ⇒ page 55 .
– Install noise insulation tray ⇒ Rep. Gr. 50 .
– Install upper toothed belt guard.
– Install connecting pipes between air filter and turbocharger and between charge air cooler and intake connecting flange.

1.3 Removing and installing cylinder head

Protected by copyright. Copying for private or commercial purposes, in part or in whole, is not permitted unless authorised by Volkswagen AG. Volkswagen AG does not guarantee or accept any liability with respect to the correctness of information in this document. Copyright by Volkswagen AG.
satelettronica

Special tools and workshop equipment required

- Support bracket -10 - 222 A-
- Bracket -T10014-
- Drip tray -V.A.G 1306- or drip tray for workshop hoist -VAS 6208-
- Torque wrench -V.A.G 1331-
- Torque wrench -V.A.G 1332-
- Hand vacuum pump -V.A.G 1390-

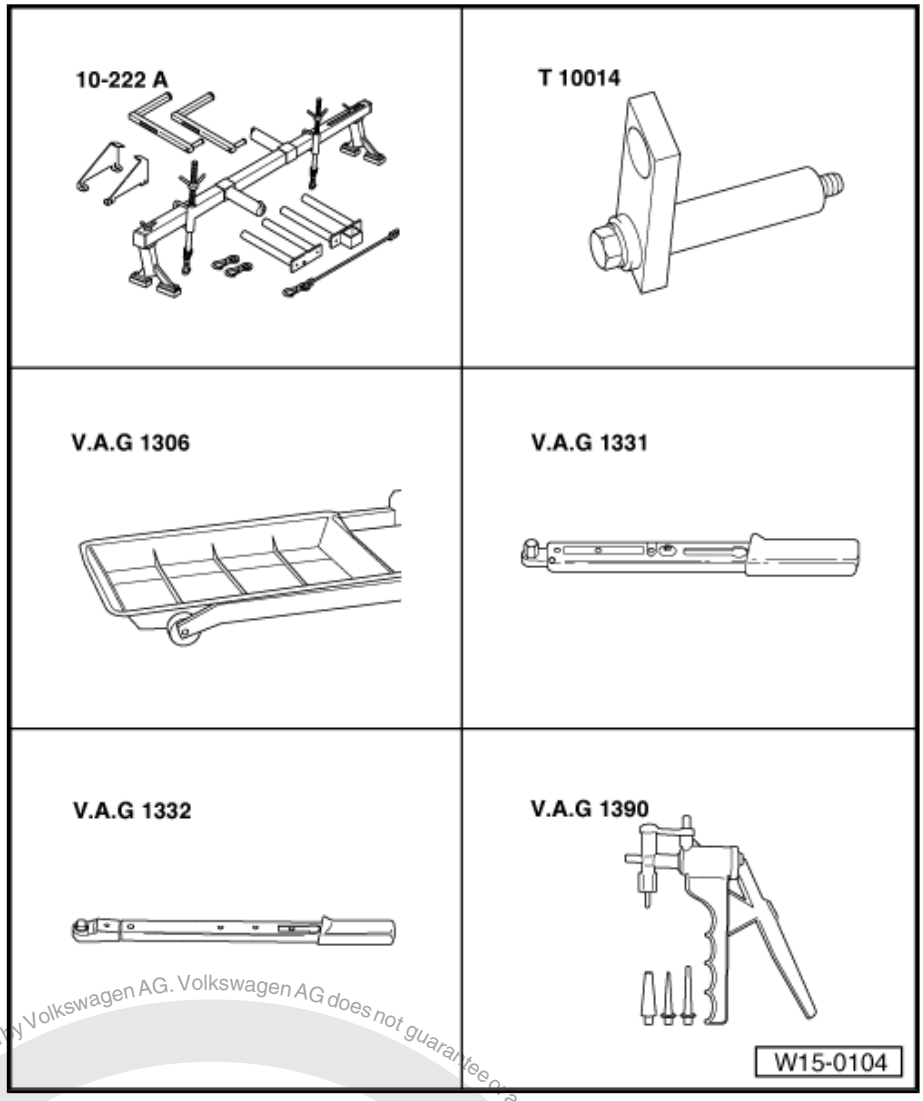

- Water drainage container -V.A.G 1390/1-

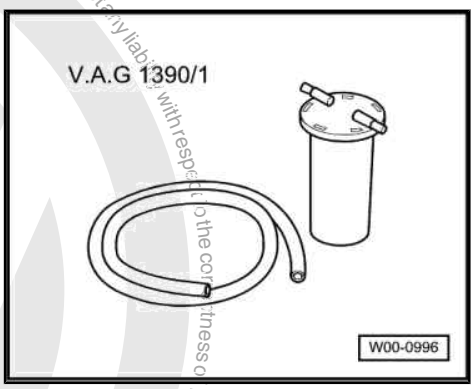

Removing

– Remove toothed belt ⇒ page 79 .

Note

Both lifting eyes are located on the cylinder head, so an additional bracket must be secured to the cylinder block to support the engine when removing the cylinder head.

Protected by copyright. Copying for private or commercial purposes, in part or in whole, is not permitted unless authorised by Volkswagen AG. Volkswagen AG does not guarantee or accept any liability with respect to the correctness of information in this document. Copyright by Volkswagen AG.
satelettronica

– Fit support bracket -10 - 222 A- as shown and support engine in installation position.

– Carefully raise engine slightly using spindle -A-.

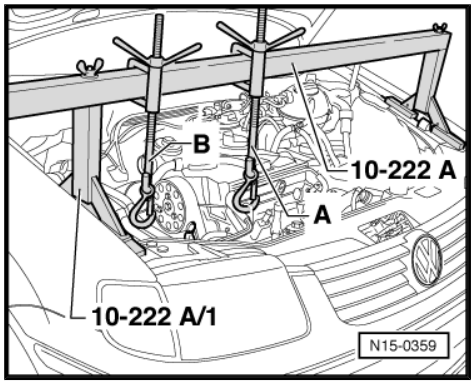

– Attach bracket -T10014- to cylinder block using threaded hole in vicinity of coolant pump -as illustrated-. Torque setting: 20 Nm.

– Lift engine slightly using spindle -B- until spindle -A- is relieved.

– Remove spindle -A-.

– Before removing cylinder head extract fuel using hand vacuum pump -V.A.G 1390- and fluid receptacle -V.A.G 1390/1- on the tandem pump ⇒ page 139 .

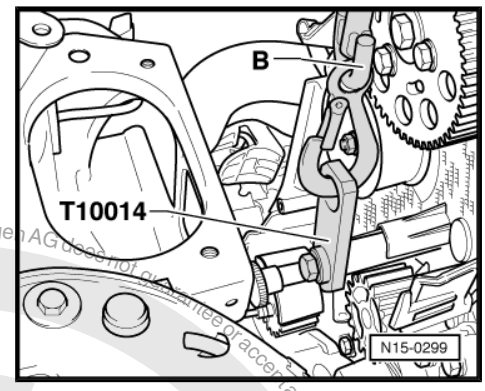

– Maintain sequence when loosening and tightening cylinder head bolts.

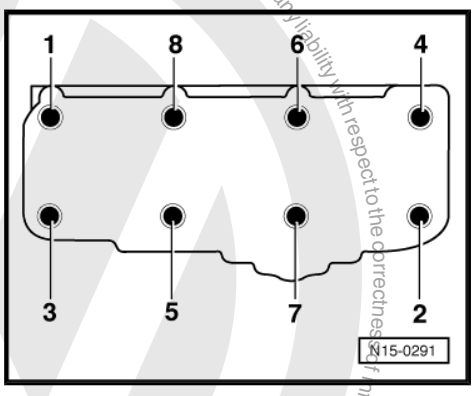

Installing

Note

- *Always renew cylinder head bolts.*
- *In cases of repair carefully remove gasket remains from cylinder head and cylinder block. Ensure that no long scores or scratches are made on the surfaces. When using abrasive paper do not use a grade less than 100.*
- *Carefully remove emery and abrasive remains.*
- *Remove new cylinder head gasket from packaging, just before installation.*
- *Handle gasket very carefully. Damaging the silicone layer or the indented area will lead to leaks.*

– Set crankshaft to TDC mark before fitting cylinder head.

– Turn crankshaft against engine direction of rotation until all pistons are about the same distance below TDC.

– Place cylinder head gasket on.

– Fit cylinder head and hand tighten all 8 cylinder head bolts.

Protected by copyright. Copying for private or commercial purposes, in part or in whole, is not permitted unless authorised by Volkswagen AG. Volkswagen AG does not guarantee or accept any liability with respect to the correctness of information in this document. Copyright by Volkswagen AG.
satelettronica

– Tighten cylinder head in four stages in sequence shown as follows:

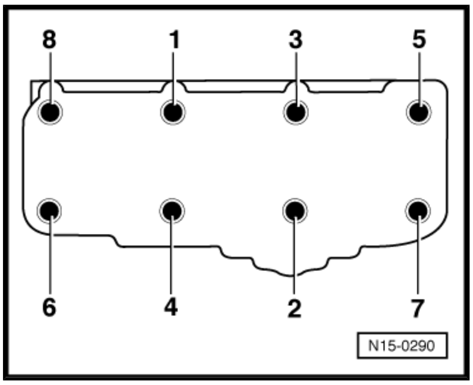

Stage	Tighten
1	– Tighten to 40 Nm using torque wrench.
2	– Tighten to 60 Nm using torque wrench.
3	– Turn 90° (1/4 turn) further using a rigid wrench.
4	– Turn 90° (1/4 turn) further using a rigid wrench.

Note

After repair work it is not necessary to retighten the cylinder head bolts.

– After tightening cylinder head, turn camshaft so that cams for No. 1 cylinder point equally upwards. Turn crankshaft, in engine direction of rotation, to TDC marking before fitting toothed belt ⇒ page 79 .

– After installing cylinder head draw in fuel using hand vacuum pump -V.A.G 1390- and water drainage container -V.A.G 1390/1- on the tandem pump ⇒ page 139 .

– Carry out road test and read all fault memories ⇒ page 7 .

1.4 Checking compression

Protected by copyright. Copying for private or commercial purposes, in part or in whole, is not permitted unless authorised by Volkswagen AG. Volkswagen AG does not guarantee or accept any liability with respect to the correctness of information in this document. Copyright by Volkswagen AG.

sateletronica

Special tools and workshop equipment required

- U/J extension and socket, 10 mm -3220-
- Torque wrench -V.A.G 1331-
- Adapter -V.A.G 1381/12-
- Compression tester -V.A.G 1763-

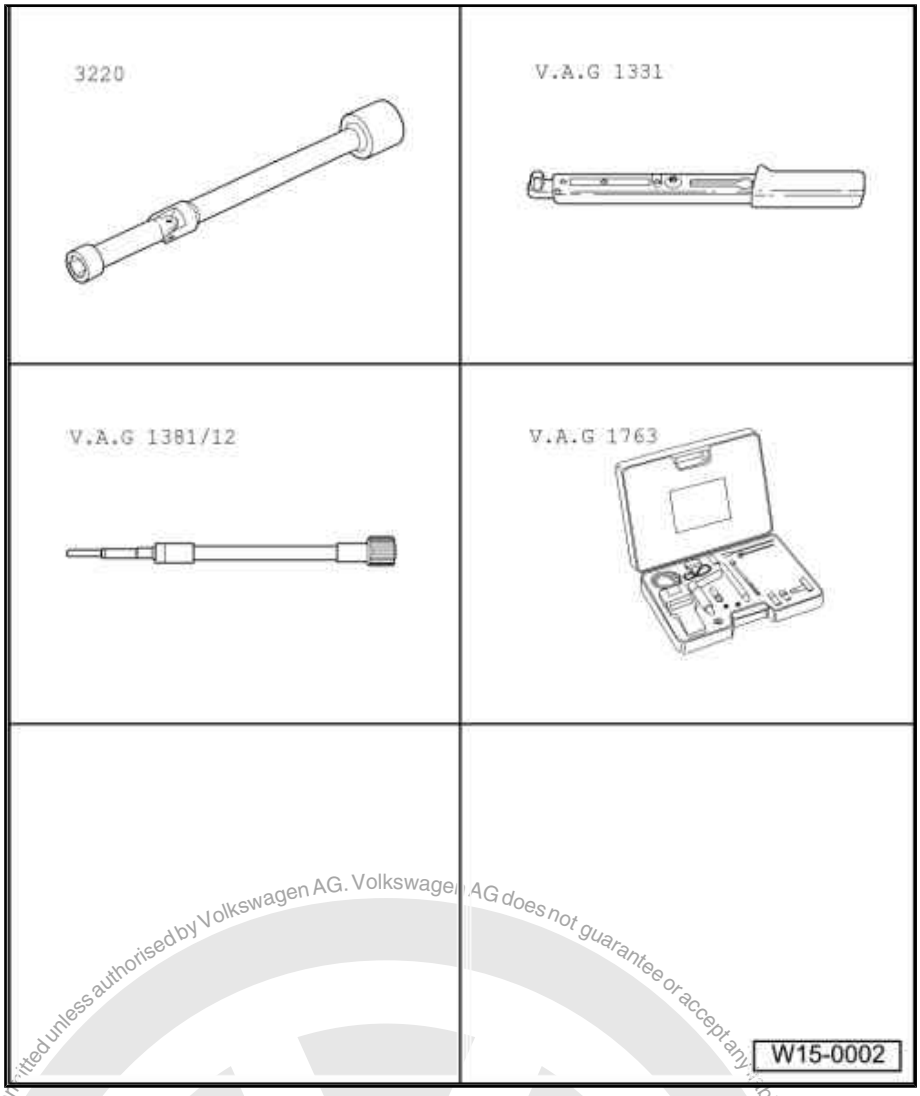

Test prerequisite

- Engine oil temperature min. 30 °C.

Test procedure

– Pull off central connector for unit injectors.

– Remove all glow plugs using 10 mm jointed wrench -3220- .

Protected by copyright. Copying for private or commercial purposes, in part or in whole, is not permitted unless authorised by Volkswagen AG. Volkswagen AG does not guarantee or accept any liability with respect to the correctness of information in this document. Copyright by Volkswagen AG.
satelettronica

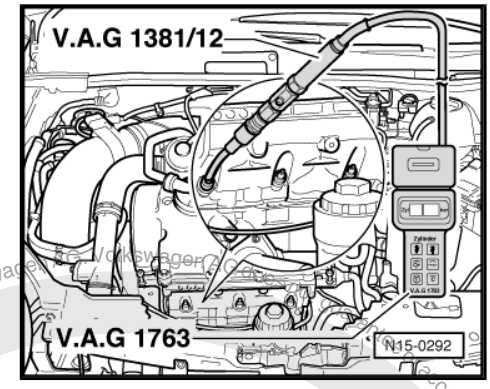

– Screw in adapter -V.A.G 1381/12- in place of the glow plugs.
– Check compression using compression tester -V.A.G 1763- .

Note

Using the compression tester ⇒ operating instructions .

– Operate starter until tester shows no further pressure increase.

Compression pressures:

New pressure in bar	Wear limit bar	Permissible difference between cylinders bar
25.0…31.0	19.0	max. 5.0

– Install all glow plugs using 10 mm jointed wrench -3220- . Torque setting: 15 Nm.
– Read fault memory ⇒ page 7 .

Note

Disconnecting the central connector for unit injectors causes faults to be stored. Therefore read and erase fault memory.

Protected by copyright. Copying for private or commercial purposes, in part or in whole, is not permitted unless authorised by Volkswagen AG. Volkswagen AG does not accept any liability with respect to the correctness of information in this document. Copyright by Volkswagen AG.
satelettronica

2 Valve gear

Note

- *Cylinder heads with cracks between the valve seats may be used without reducing engine life, provided the cracks are small and not more than 0.5 mm wide.*
- *All bearing and running surfaces must be oiled before assembly.*

2.1 Assembly overview - valve gear

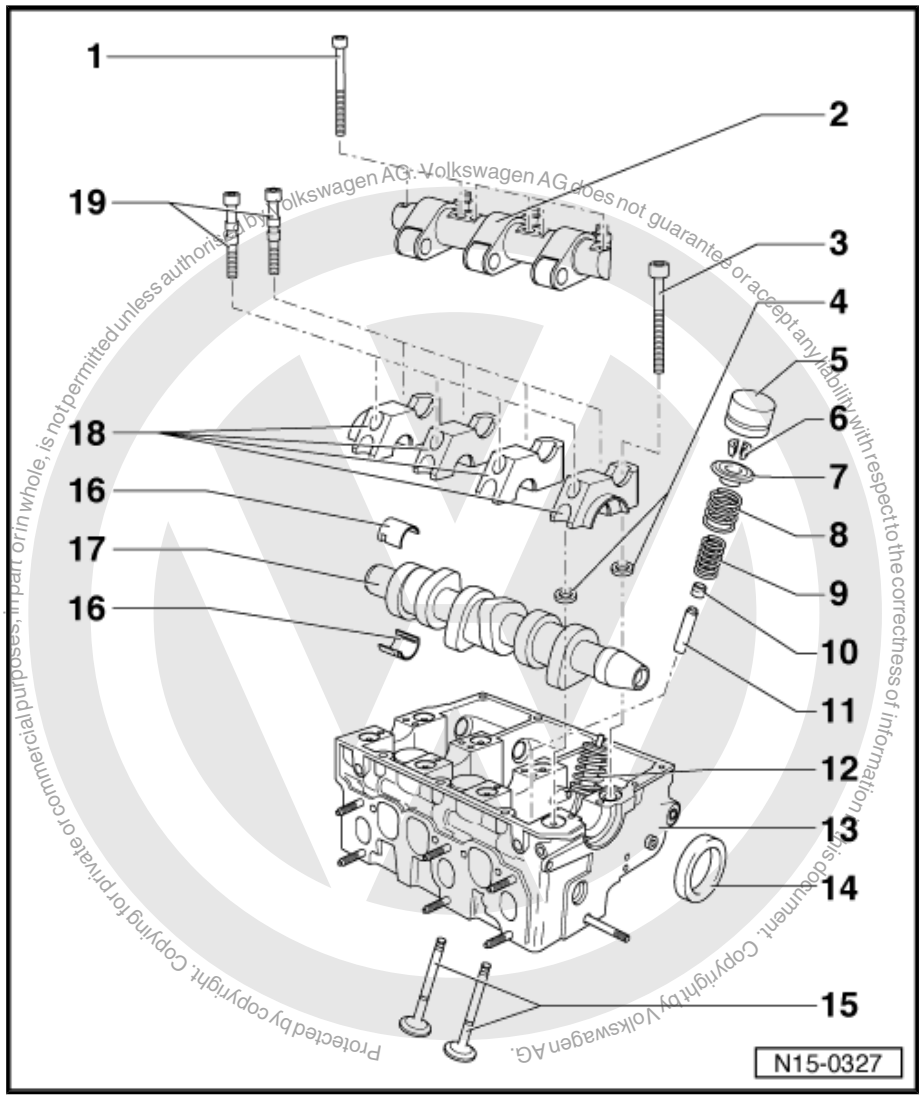

1 - 20 Nm + 1/4 turn (90°) further
- ❑ Renew
- ❑ Observe sequence when loosening and tightening ⇒ page 97 .

2 - Rocker arm shaft

3 - Cylinder head bolt
- ❑ Renew
- ❑ Observe sequence when loosening and tightening ⇒ page 84 .
- ❑ Before installing, insert washers ⇒ Item 4 (page 90) in cylinder head.

4 - Washer
- ❑ For cylinder head bolts.

5 - Bucket tappet
- ❑ Do not interchange
- ❑ With hydraulic valve clearance compensation.
- ❑ Store with cam contact surface downwards
- ❑ Before installing check camshaft axial clearance ⇒ page 91 .
- ❑ Lubricate contact surface
- ❑ Before removing, remove camshaft bearing caps

6 - Cotters

7 - Valve spring plate

8 - Outer valve spring
- ❑ With cylinder head removed: remove using valve spring compressor -2037- .
- ❑ Cylinder head installed ⇒ page 95 .

9 - Inner valve spring
- ❑ With cylinder head removed: remove using valve spring compressor -2037- .

Protected by copyright. Copying for private or commercial purposes, in part or in whole, is not permitted unless authorised by Volkswagen AG. Volkswagen AG does not guarantee or accept any liability with respect to the correctness of information in this document. Copyright by Volkswagen AG.
satelettronica

- ❑ Cylinder head installed ⇒ page 95 .
- ❑ Set in cylinder head before installing bearing caps.

10 - Valve stem seal

- ❑ Renewing ⇒ page 95 .

11 - Valve guide

- ❑ Checking ⇒ page 94
- ❑ Renewing ⇒ page 94 .
- ❑ Service version with collar.

12 - Unit injector

- ❑ Removing and installing ⇒ page 159 .

13 - Cylinder head

- ❑ See note ⇒ page 90 .
- ❑ Reworking valve seats ⇒ page 92 .

14 - Seal

- ❑ Do not additionally oil or grease sealing lip of oil seal.
- ❑ Before installing, remove residual oil from camshaft journal using a clean cloth.
- ❑ To install, mask off groove on camshaft taper (e.g. using Sellotape)
- ❑ Removing and installing ⇒ page 101 .

15 - Valves

- ❑ Valve dimensions ⇒ page 92

16 - Bearing shell

- ❑ Do not interchange used bearing shells (mark).
- ❑ Ensure proper seating of retaining lugs in bearing caps and cylinder head.

17 - Camshaft

- ❑ Checking axial clearance ⇒ page 91 .
- ❑ Removing and installing ⇒ page 97 .
- ❑ Check radial clearance with Plastigage, wear limit: 0.11 mm.
- ❑ Runout: max. 0.01 mm.
- ❑ Identification and valve timing ⇒ page 92

18 - Bearing cap

- ❑ Installation sequence ⇒ page 97
- ❑ Bearing cap 4 is marked as bearing cap 5
- ❑ To install, seal parting surfaces of bearing caps 1 and 4 with AMV 17400401 ⇒ page 92 .

19 - 8 Nm + $^1/_4$ turn (90°) further

- ❑ Renew

Protected by copyright. Copying for private or commercial purposes, in part or in whole, is not permitted unless authorised by Volkswagen AG. Volkswagen AG does not guarantee or accept any liability with respect to the correctness of information in this document. Copyright by Volkswagen AG.

satelettronica

Checking camshaft axial clearance

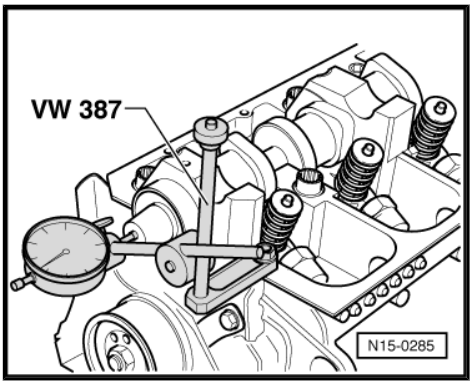

Special tools and workshop equipment required

- Universal dial gauge bracket -VW 387-
- Dial gauge

Perform measurements with bucket tappets removed and bearing caps fitted.

Wear limit: max. 0.15 mm

Seal parting surfaces of bearing caps 1 and 4 with sealant -AMV 17400401-

Apply sealant -AMV 17400401- thinly and evenly to surfaces -1-.

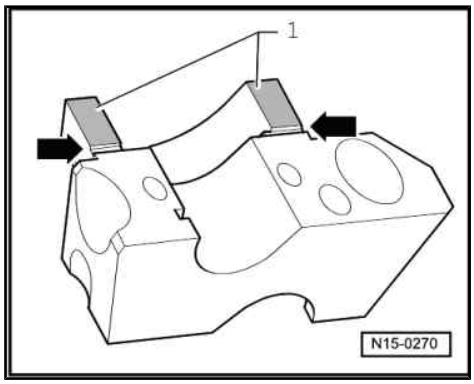

Note

- *Be careful that no sealant gets into grooves -arrows-.*
- *Bearing cap 4 is marked as bearing cap 5*

Valve dimensions

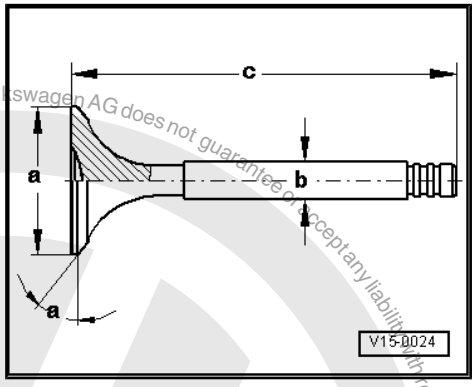

Note

Valves must not be reworked. Only lapping-in is permitted.

Dimension		Inlet valve	Exhaust valve
∅ a	mm	35.95	31.45
∅ b	mm	6.980	6.956
c	mm	89.95	89.95
α	∠°	45	45

Camshaft identification, valve timing

Identification

- Cam base diameter: a = 52.8 mm ∅.
- Identification by stamped numbers and letters on face of no. 3 cylinder exhaust cam.

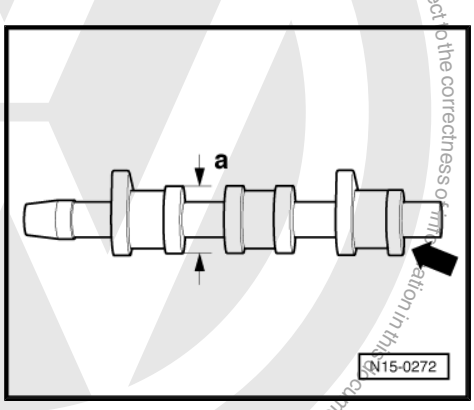

No. 3 cylinder -arrow-	858 C

Valve timing at 1 mm valve lift

Inlet opens after TDC	15.8°
Inlet closes after BDC	25.3°
Exhaust opens before BDC	28.2°
Exhaust closes before TDC	18.7°

2.2 Reworking valve seats

Special tools and workshop equipment required

- Depth gauge
- Valve seat refacing tool

Protected by copyright. Copying for private or commercial purposes, in part or in whole, is not permitted unless authorised by Volkswagen AG. Volkswagen AG does not guarantee or accept any liability with respect to the correctness of information in this document. Copyright by Volkswagen AG.
satelettronica

Protected by copyright. Copying for private or commercial purposes, in part or in whole, is not permitted unless authorised by Volkswagen AG. Volkswagen AG does not guarantee or accept any liability with respect to the correctness of information in this document. Copyright by Volkswagen AG.

satelettronica

Note

- *When repairing engines with leaking valves, it is not sufficient to reface or renew valve seats and valves. There is also a requirement to check the valve guides for wear. This is particularly important on high mileage engines.*
- *Valve seats should be reworked only enough to produce a perfect seating pattern. Before beginning to rework valve seats, calculate the maximum permissible reworking dimensions. If the reworking dimension is exceeded, hydraulic valve compensation can no longer be guaranteed and the cylinder head should be renewed.*

The max. permissible reworking dimension is calculated as follows:

– Insert valve and press firmly against seat.

Note

If the valve is to be renewed as part of a repair, use a new valve for the calculation.

– Measure distance -a- between end of valve stem and upper edge of cylinder head.

– Calculate maximum permissible reworking dimension from measured distance -a- and minimum dimension.

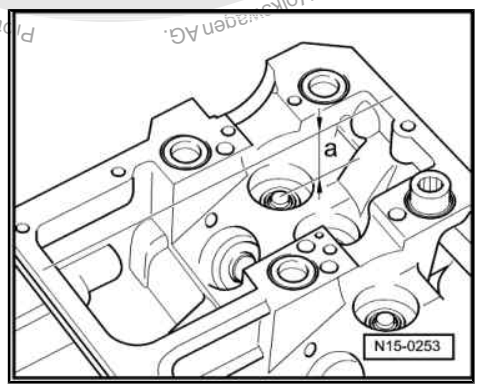

Minimum dimension:

Inlet valve 43.4 mm

Exhaust valve 43.2 mm

Measured distance minus minimum dimension = max. permissible machining dimension.

Example:

	Measured distance	44.1 mm
-	Minimum dimension	43.4 mm
=	max. permissible rework dimension	0.7 mm

2.2.1 Reworking inlet valve seat

Dimension	Inlet valve seat
∅ a mm	35.7
b mm	1.6
45°	Valve seat angle

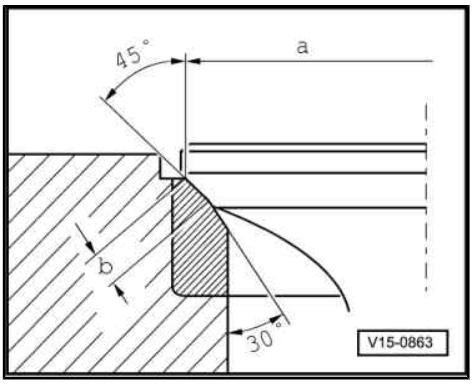

Note

The 30° lower valve seat chamfer is necessary to ensure that the inlet channel flow characteristics are maintained.

2.2.2 Reworking exhaust valve

Dimension		Exhaust valve seat
∅ a	mm	31.4
b	mm	2.7
45°		Valve seat angle

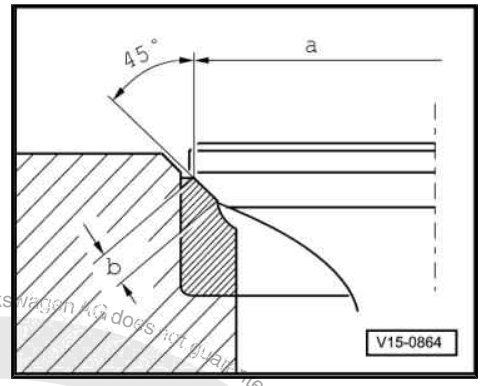

2.3 Checking valve guides

Special tools and workshop equipment required

- Universal dial gauge bracket -VW 387-

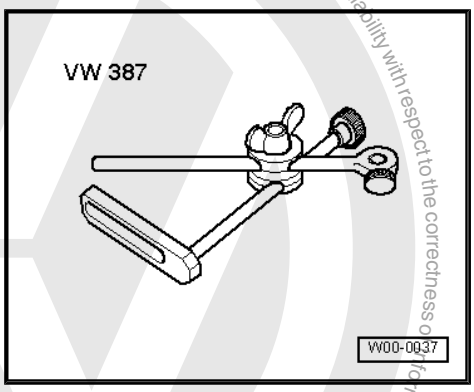

- Dial gauge

Test procedure

– Insert new valve into guide. The end of the valve stem must be flush with the guide. Due to differences in stem diameters, use only an inlet valve in inlet guide and an exhaust valve in exhaust guide.

– Rock: max. 1.3 mm

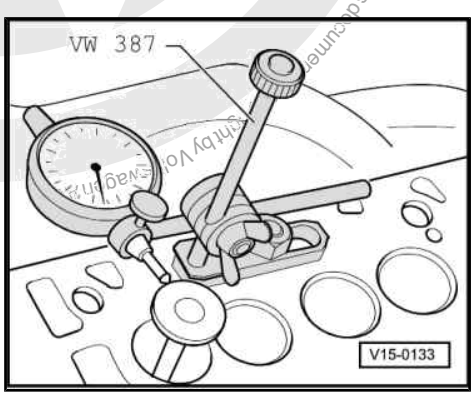

2.4 Renewing valve guides

Special tools and workshop equipment required

Protected by copyright. Copying for private or commercial purposes, in part or in whole, is not permitted unless authorised by Volkswagen AG. Volkswagen AG does not guarantee or accept any liability with respect to the correctness of information in this document.
satelettronica

♦ Drift -3121-

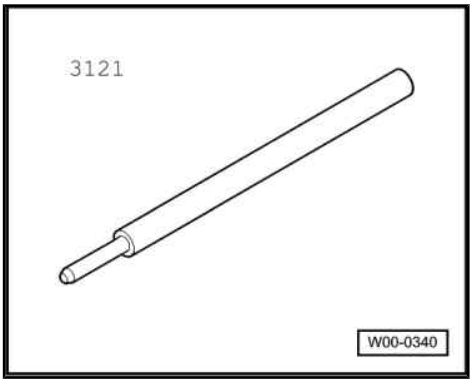

♦ 7 mm reamer -3120-

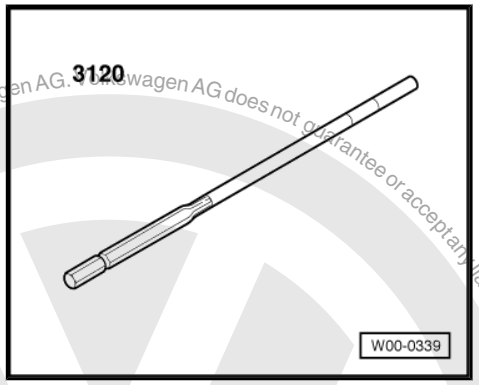

Protected by copyright. Copying for private or commercial purposes, in whole or in part, is not permitted unless authorised by Volkswagen AG. Volkswagen AG does not guarantee or accept any liability with respect to the correctness of information in this document. Copyright by Volkswagen AG.
satelittronica

Removing

– Clean and check cylinder head. Cylinder heads in which the valve seats can no longer be reworked, or cylinder heads which have already been machined to the minimum dimension, should not have the valve guides replaced.

– Press out worn valve guides with drift -3121- , from camshaft side (repair version valve guides with shoulder from combustion chamber side).

Installing

– Press in new guides, moistened with oil, from camshaft side up to shoulder into a cold cylinder head using drift -3121- .

Note

When the shoulder on guide makes contact, the pressure must not exceed 1.0 t otherwise shoulder may break off.

– Ream valve guide with 7 mm reamer -3120- . Use plenty of cutting fluid.

– Reworking valve seats ⇒ page 92 .

2.5 Renewing valve stem seals

Special tools and workshop equipment required

- Valve assembly device -2036-
- Puller -3047 A-
- Fitting tool -3129-
- Valve lever -VW 541/1 A-
- Thrust piece for VW 541 / 1 A and 2037 -VW 541/5-

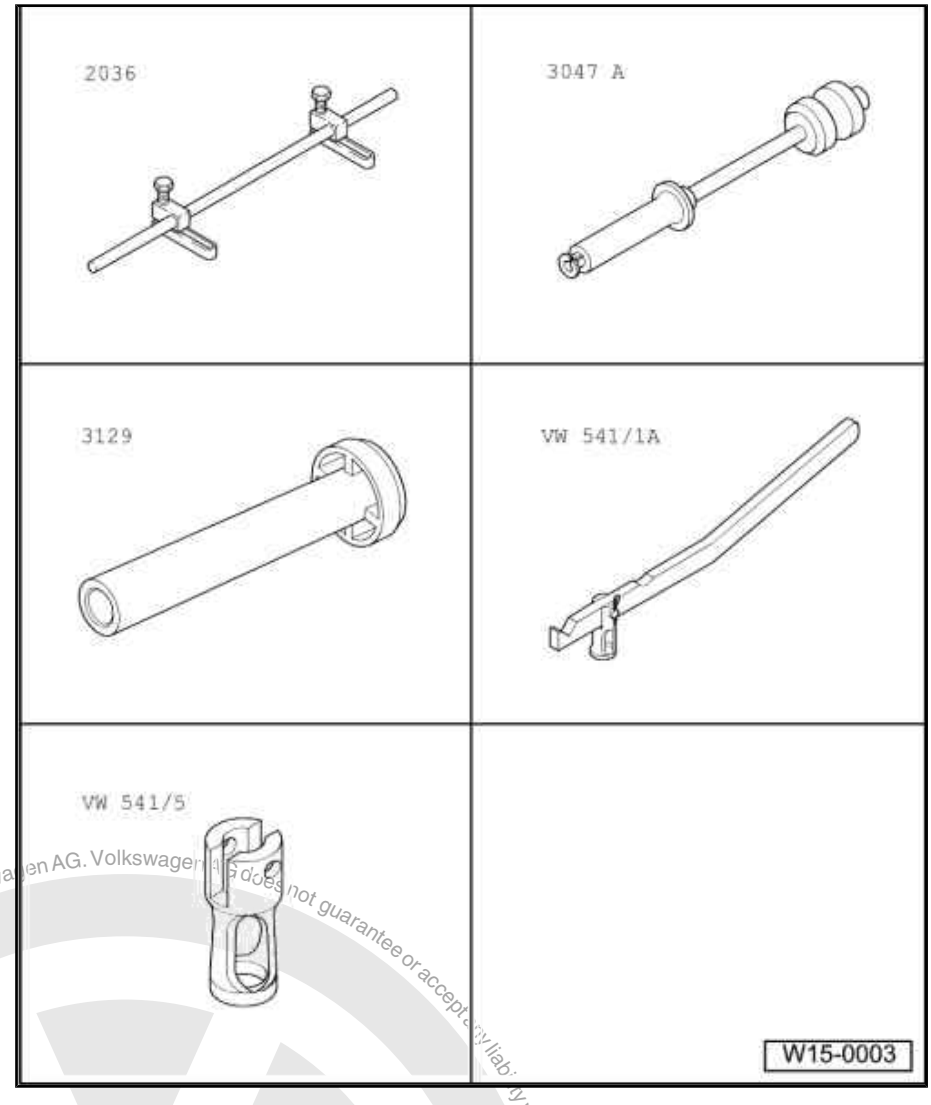

Removing

(with cylinder head installed)

– Remove camshaft ⇒ page 97 .

– Remove bucket tappets and place them with the contact surface downwards. When doing this, ensure that tappets are not interchanged.

– Set piston of respective cylinder to top dead centre (TDC).

– Fit valve assembly tool -2036- and adjust mountings to height of studs.

– Remove valve springs using valve lever -VW 541/1 A- and thrust piece for VW 541 / 1 A and 2037 -VW 541/5- .

Note

The valves are supported by the piston crown.

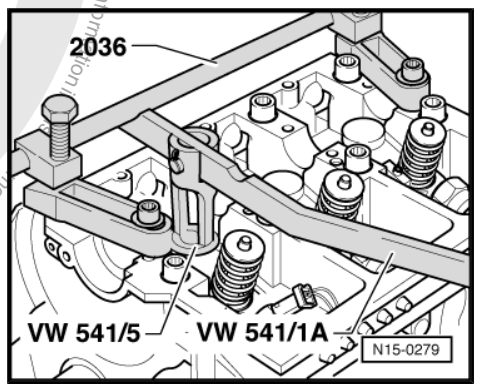

Protected by copyright. Copying for private or commercial purposes, in part or in whole, is not permitted unless authorised by Volkswagen AG. Volkswagen AG does not guarantee or accept any liability with respect to the correctness of information. Copyright by Volkswagen AG.
satelettronica

– Pull off valve stem seals using puller -3047 A- .

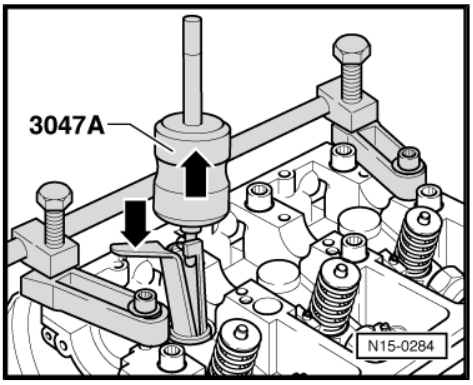

Installing

– Place the plastic sleeve -A- supplied on the respective valve stem. This will prevent the new valve stem seal -B- being damaged.
– Place new valve stem seal in fitting tool -3129- .
– Oil valve stem seal sealing lip and press carefully onto the valve guide.

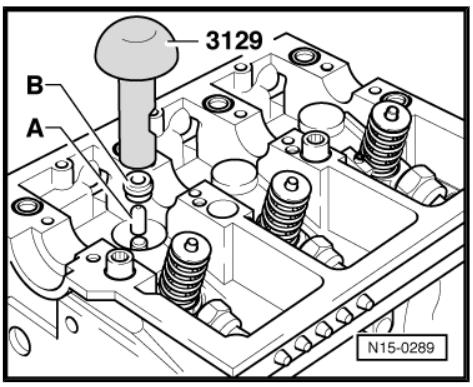

2.6 Removing and installing camshaft

Protected by copyright. Copying for private or commercial purposes, in part or in whole, is not permitted unless authorised by Volkswagen AG. Volkswagen AG does not guarantee or accept any liability with respect to the correctness of information in this document. Copyright by Volkswagen AG.

satelettronica

Special tools and workshop equipment required

- Counter-hold tool -T10051-
- Puller -T10052-
- Torque wrench -V.A.G 1331-
- Torque wrench -V.A.G 1332-
- Sealant -AMV 17400401-

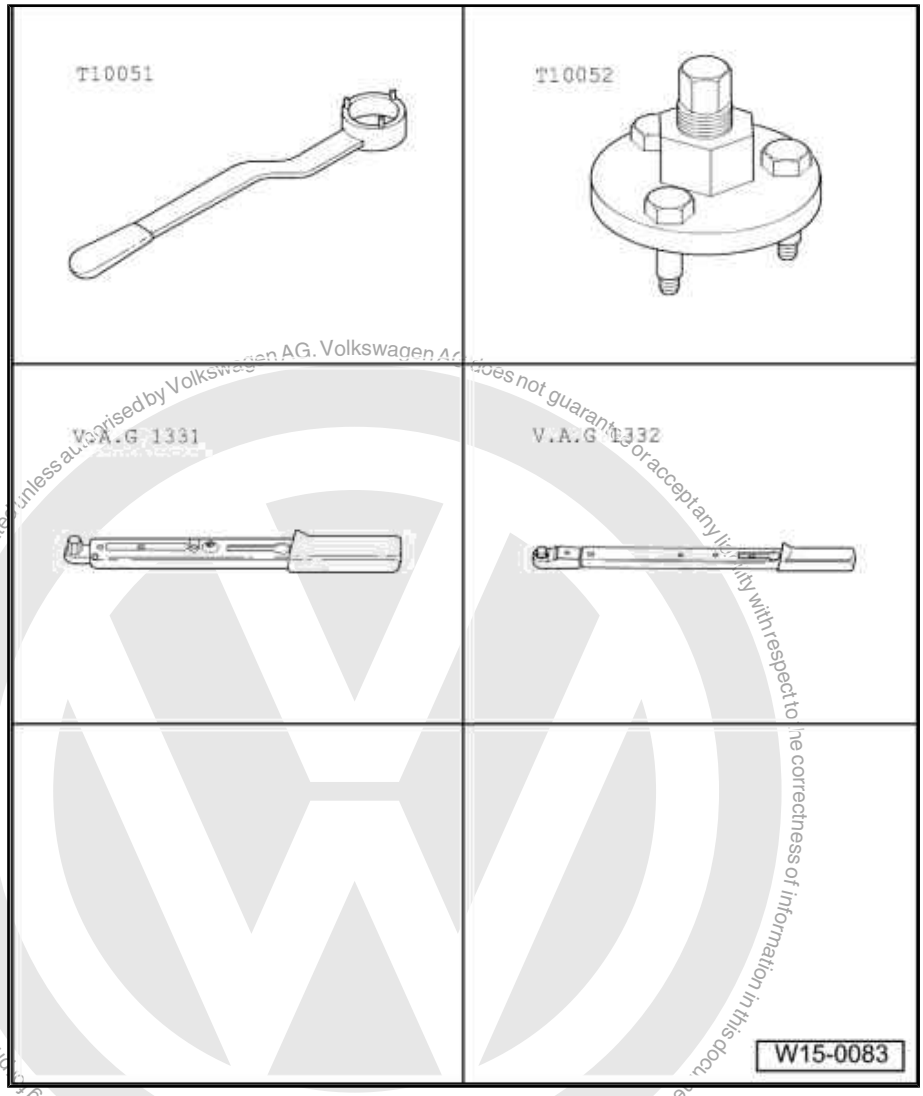

Removing

– Remove poly V-belt ⇒ page 55 .
– Remove toothed belt ⇒ page 79 .
– Remove securing bolts for camshaft toothed belt pulley -1-.
– Pull camshaft toothed belt pulley off hub.

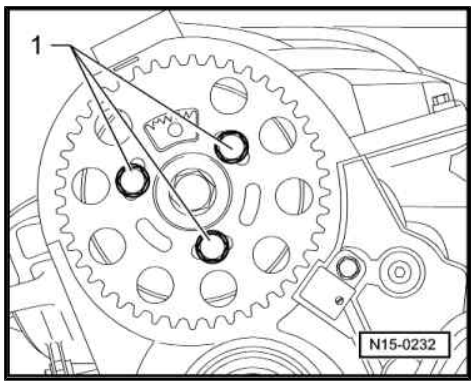

Protected by copyright. Copying for private or commercial purposes, in part or in whole, is not permitted unless authorised by Volkswagen AG. Volkswagen AG does not guarantee or accept any liability with respect to the correctness of information in this document. Copyright by Volkswagen AG.
satelettronica

– Loosen hub securing bolt -1-.
– To do this, use counter-hold tool -T10051- .
– Loosen hub securing bolt about 2 turns.

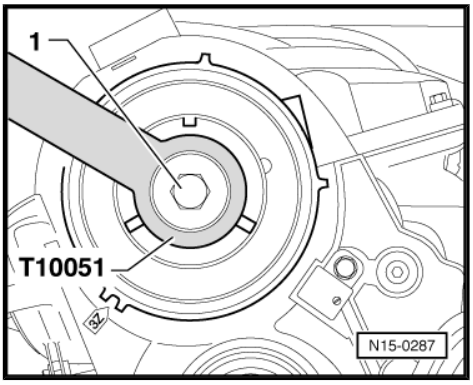

Protected by copyright. Copying for private or commercial purposes, in part or in whole, is not permitted unless authorised by Volkswagen AG. Volkswagen AG does not guarantee or accept any liability with respect to the correctness of information in this document. Copyright by Volkswagen AG.

satelettronica

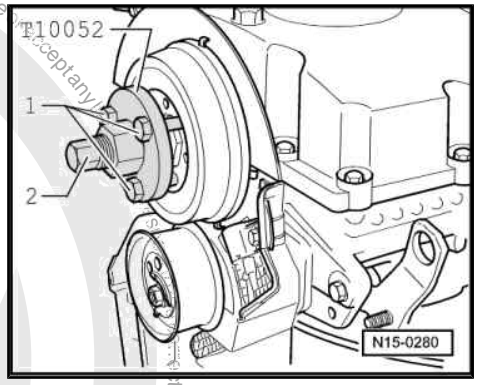

– Fit puller -T10052- and align it with holes in hub.
– Insert securing bolts -1- in hub.
– Apply tension to hub by evenly tightening puller central bolt -2- until hub releases from taper of camshaft.

Note

When doing this, hold puller with 30 mm spanner.

– Remove hub from taper of camshaft.
– Remove cylinder head cover.
– Remove rocker arm shaft.

Note

First loosen the outer and then both inner securing bolts, using diagonal sequence.

– Remove tandem pump ⇒ page 139 .
– First remove bearing caps 2 and 3. Loosen bearing caps 1 and 4 alternately and diagonally.

Note

Bearing cap 4 is marked as bearing cap 5

Installing

Note

- *When camshaft is installed, No. 1 cylinder cams must point upwards.*
- *Do not interchange used bearing shells (mark).*
- *When installing the camshaft, ensure proper seating of retaining lugs in bearing caps and cylinder head.*
- *Before installing bearing caps, ensure that cylinder head bolt washers are inserted in the cylinder head.*

– Oil running surfaces of shell bearings.
– Tighten bearing caps 2 and 3 alternately and diagonally to 8 Nm + $^{1}/_{4}$ turn (90°) further.
– Install bearing caps 1 and 4 and also tighten to 8 Nm + $^{1}/_{4}$ turn (90°) (renew bolts).

Note

- *Bearing cap 4 is marked as bearing cap 5*
- *Seal parting surfaces of bearing caps 1 and 4 with sealant - AMV 17400401-* *⇒ page 92* .
- *Bearing cap 4 must be flush with outer edge of cylinder head, otherwise leaks can occur at the tandem pump.*

Protected by copyright. Copying for private or commercial purposes, in part or in whole, is not permitted unless authorised by Volkswagen AG. Volkswagen AG does not guarantee or accept any liability with respect to the correctness of information in this document. Copyright by Volkswagen AG.
satelettronica

– Install camshaft oil seal ⇒ page 101 .

– Install rocker arm shaft, first tighten the inner and then the outer securing bolts evenly using diagonal sequence. Torque setting: 20 Nm + $^{1}/_{4}$ turn (90°) further.

– Set hub on camshaft.

– Tighten hub securing bolt -1-Tightening torque: 100 Nm.

– To do this, use counter-hold tool -T10051- .

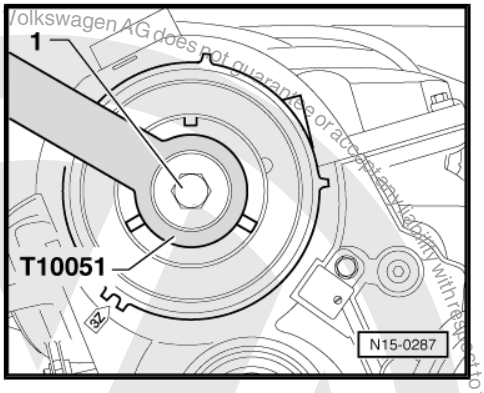

– Push camshaft toothed belt pulley onto hub.

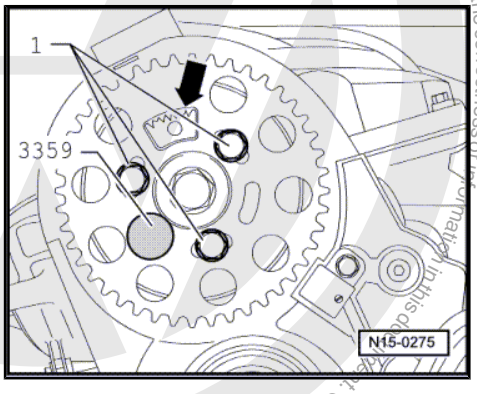

Note

The toothed segment -arrow- of the camshaft belt pulley must be on top.

– Align camshaft toothed belt pulley at centre of elongated holes.

– Hand tighten securing bolts -1- to camshaft toothed belt pulley so that there is no play.

– Lock the hub using diesel injection pump locking pin -3359- .

– Install and tension toothed belt ⇒ page 79 .

– Install tandem pump ⇒ page 139 .

Note

When new bucket tappets have been installed the engine must not be started for about 30 minutes. Hydraulic valve compensation elements have to settle (otherwise valves will strike pistons).

2.7 Removing and installing camshaft oil seal

Protected by copyright. Copying for private or commercial purposes, in part or in whole, is not permitted unless authorised by Volkswagen AG. Volkswagen AG does not guarantee or accept any liability with respect to the correctness of information in this document. Copyright by Volkswagen AG.
satelettronica

Special tools and workshop equipment required

- Fitting tool -10 - 203-
- Oil seal extractor -3240-
- Torque wrench -V.A.G 1331-
- Torque wrench -V.A.G 1332-
- Bolt M12×65

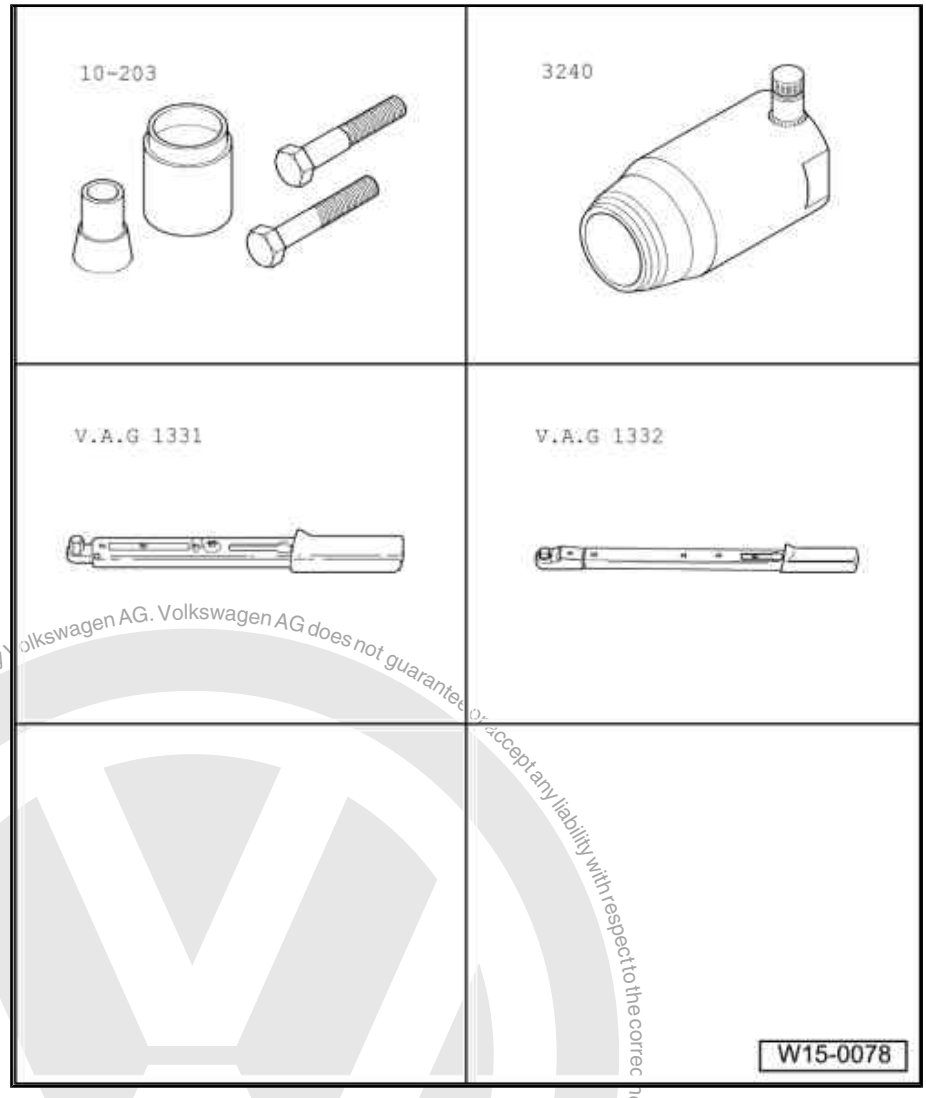

Removing

– Remove poly V-belt ⇒ page 55 .

– Remove toothed belt ⇒ page 79 .

– Remove camshaft pulley and hub ⇒ page 97 .

– Screw inner part of oil seal extractor -3240- two turns (approx. 3 mm) out of outer part and lock using knurled screw.

Protected by copyright. Copying for private or commercial purposes, in part or in whole, is not permitted unless authorised by Volkswagen AG. Volkswagen AG does not guarantee or accept any liability with respect to the correctness of information in this document. Copyright by Volkswagen AG.
satelettronica

– Lubricate threaded head of oil seal extractor -3240- , place it in position and exerting firm pressure, screw it as far as possible into oil seal.

– Loosen knurled screw and turn inner part against camshaft until the oil seal is pulled out.

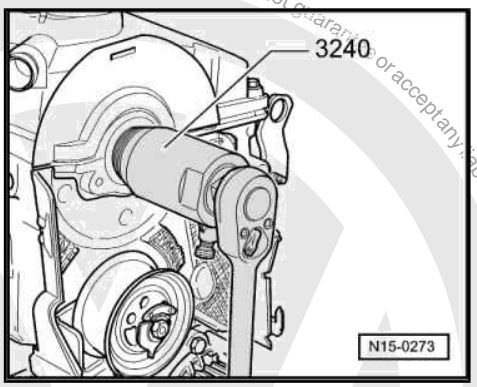

Installing

Note

The oil seal sealing lip must not be additionally oiled or greased.

– Remove oil residue from camshaft journal using a clean cloth.

– Tape over groove in taper of camshaft (e.g. with Sellotape).

– Fit oil seal carefully on camshaft.

– Press in oil seal with press piece of fitting tool -10 - 203- and bolt M12×65 onto stop.

– Install and tension toothed belt ⇒ page 79 .

– Install poly V-belt ⇒ page 55 .

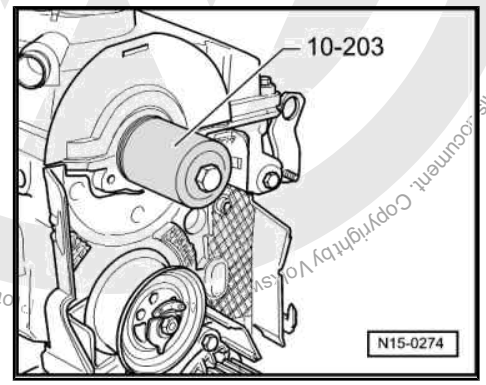

satelettronica

17 – Lubrication

1 Parts of lubrication system

Note

- *If large quantities of swarf or metal particles (caused, for example, by partial seizure of the crankshaft or conrod bearings) are found in the engine oil when performing repairs, clean the oil passages thoroughly and renew the oil cooler in order to prevent subsequent damage.*
- *The oil level must not be above the max. mark - danger of damage to catalytic converter!*
- *All bearing and running surfaces must be oiled before assembly.*

Checking oil pressure ⇒ page 110

1.1 Engine oil

Oil capacities:

With oil filter 4.2 l

Engine oil specifications:

Only use engine oil conforming to VW standard 50501.

1.2 Assembly overview - parts of lubrication system

Part II Dismantling oil filter bracket ⇒ page 107

Part III Removing and installing oil supply line ⇒ page 108

Protected by copyright. Copying for private or commercial purposes, in part or in whole, is not permitted unless authorised by Volkswagen AG. Volkswagen AG does not guarantee or accept any liability with respect to the correctness of information in this document. Copyright by Volkswagen AG.
satelettronica

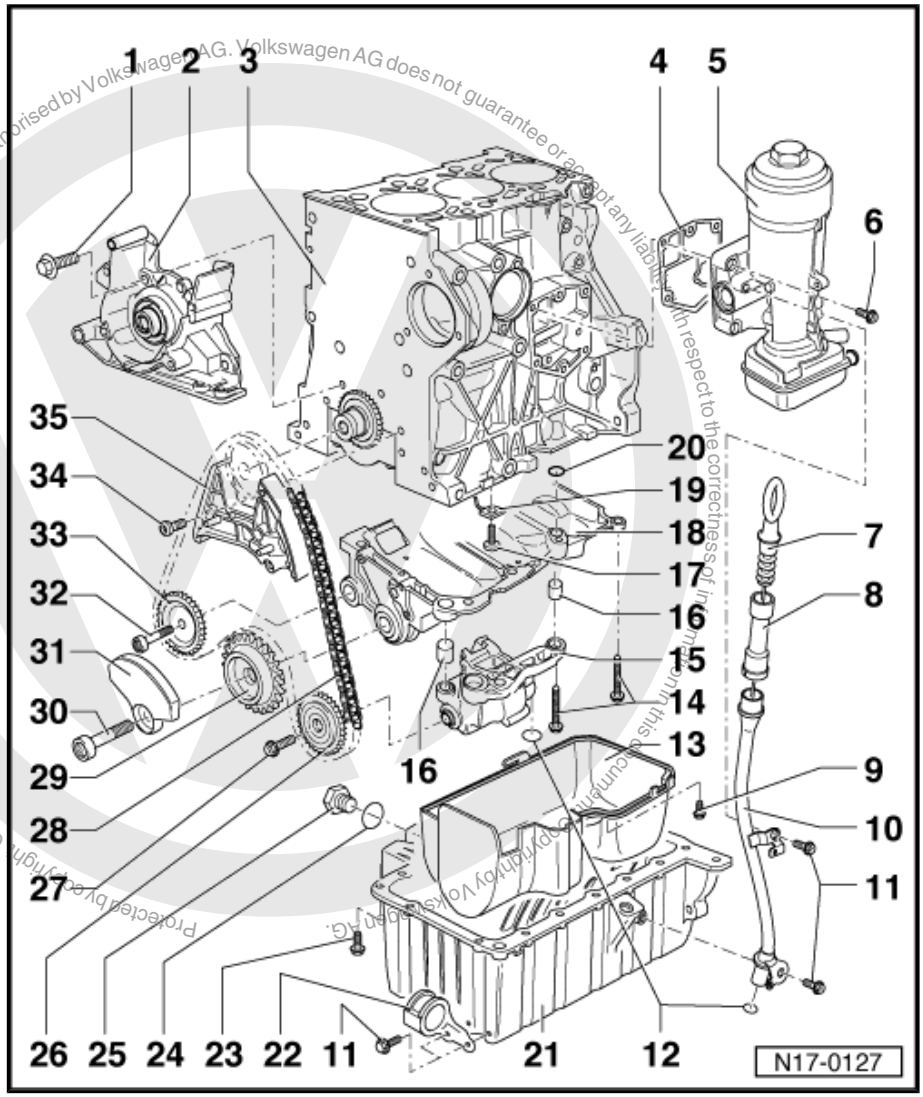

1 - 15 Nm

2 - Sealing flange

- ❑ With seal.
- ❑ Must seat on dowel sleeves.
- ❑ Removing and installing ⇒ page 60 .
- ❑ Install with silicone sealant -D 176 404 A2- ⇒ page 60 .
- ❑ Do not additionally oil or grease sealing lip of oil seal
- ❑ Before installing, remove oil residue from crankshaft journal using a clean cloth.
- ❑ Renewing crankshaft oil seal - belt pulley end ⇒ page 59 .

3 - Cylinder block

4 - Seal

- ❑ Renew

5 - Oil filter bracket

- ❑ Dismantling and assembling ⇒ page 107 .

6 - 15 Nm + 1/4 turn (90°) further

- ❑ Renew
- ❑ First fit upper left and lower right bolts and then tighten all four bolts diagonally.

7 - Oil dipstick

- ❑ The oil level must not be above the max. mark!
- ❑ Markings ⇒ page 108

8 - Dipstick guide

- ❑ Pull out to extract oil.

9 - 5 Nm

10 - Guide tube

11 - 10 Nm

12 - O-ring

- ❑ Renew
- ❑ Check for secure seating.
- ❑ Lightly oil before installing

13 - Cover

- ❑ With sealing strip
- ❑ Clean strainer if dirty

14 - 20 Nm

15 - Oil pump

- ❑ With 11.5 bar pressure relief valve.

satelettronica

- ❑ Before installing, ensure that both dowel sleeves for centring are installed.

16 - Dowel sleeve

17 - 25 Nm

- ❑ Insert without sealant.

18 - Retaining frame

- ❑ Before installing, check that the dowel sleeves for centring oil pump on cylinder block are fitted and the O-ring is fitted in the retaining frame
- ❑ Removing and installing ⇒ page 64 .

19 - Oil spray jet

- ❑ For piston cooling.
- ❑ Note installation position: turn oil spray jet anti-clockwise onto stop in cylinder block and tighten in this position

20 - O-ring

- ❑ Renew

21 - Sump

- ❑ Clean sealing surface before fitting.
- ❑ Install with silicone sealant -D 176 404 A2- ⇒ page 109 .
- ❑ To remove sump, gearbox must be removed ⇒ Rep. Gr. 34

22 - Bracket

- ❑ For charge air cooler connecting pipe

23 - 15 Nm

- ❑ To remove rear bolts to gearbox, gearbox must be removed ⇒ Rep. Gr. 34

24 - Seal

- ❑ Renew

25 - Oil drain plug, 30 Nm

- ❑ Renew plug with attached seal.

26 - Sprocket

- ❑ For oil pump.
- ❑ Can only be installed in one position

27 - 20 Nm + 1/4 turn (90°) further

- ❑ Renew

28 - Chain

- ❑ Note installation position ⇒ page 64 .

29 - Sprocket

- ❑ For balancer shaft.
- ❑ Can only be installed in one position

30 - 100 Nm + 1/4 turn (90°) further

- ❑ Renew
- ❑ Turning further can be done in several stages.
- ❑ Use counter-hold tool -T10061- to loosen and tighten

31 - Balance weight

- ❑ Can only be installed in one position

32 - 20 Nm

33 - Idler chain sprocket

34 - 8 Nm + 1/4 turn (90°) further

- ❑ Renew

Protected by copyright. Copying for private or commercial purposes, in part or in whole, is not permitted unless authorised by Volkswagen AG. Volkswagen AG does not guarantee or accept any liability with respect to the correctness of information in this document. Copyright by Volkswagen AG.
satelettronica

35 - Chain tensioner with tensioning plate

- ❑ To remove, lock with locking pin -T10060 A-
- ❑ Removing and installing ⇒ page 64 .

1.2.1 Part II Dismantling oil filter bracket

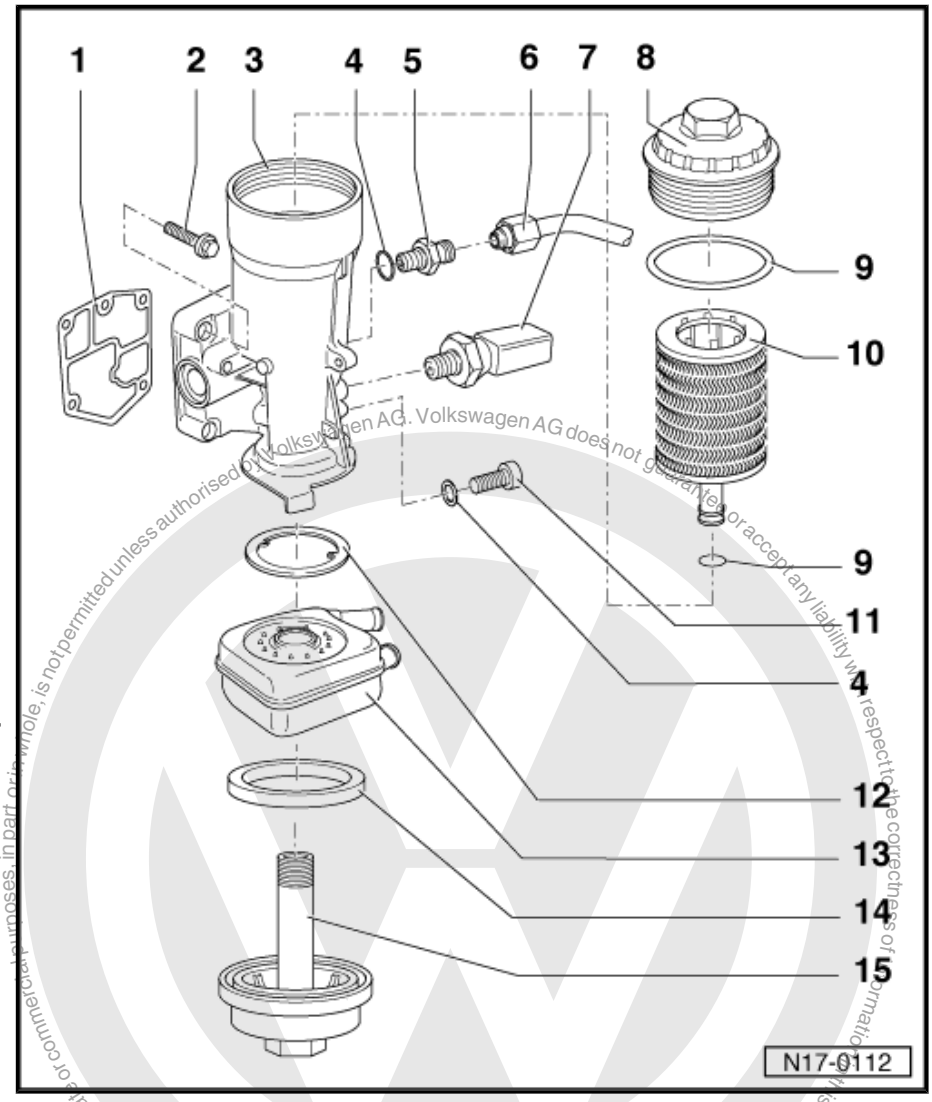

1 - Seal

- ❑ Renew

2 - 15 Nm + 1/4 turn (90°) further

- ❑ Renew
- ❑ First fit upper left and lower right bolts and then tighten all four bolts diagonally.

3 - Oil filter bracket

4 - Seal

- ❑ Renew

5 - Union, 25 Nm

- ❑ For oil supply line to turbocharger

6 - Oil supply line

- ❑ To turbocharger.
- ❑ Removing and installing ⇒ page 108 .

7 - 0.7 bar oil pressure switch - F1- , 20 Nm

- ❑ If sealing ring is leaking, nip open and renew.
- ❑ Checking ⇒ page 110

8 - Cap, 25 Nm

9 - O-ring

- ❑ Renew

10 - Oil filter element

11 - Plug, 10 Nm

12 - Seal

- ❑ Renew
- ❑ Fit into lugs on oil cooler.

13 - Oil cooler

- ❑ Note installation position.
- ❑ See note ⇒ page 104 .

14 - Seal

- ❑ Renew

15 - Plug, 25 Nm

Protected by copyright. Copying for private or commercial purposes, in part or in whole, is not permitted unless authorised by Volkswagen AG. Volkswagen AG does not guarantee or accept any liability with respect to the correctness of information in this document. Copyright by Volkswagen AG.
satelettronica

Markings on oil dipstick

1 - Max. mark

2 - Min. mark

a - Area above hatched field up to max. mark: do not top-up with engine oil!

b - Oil level within hatched field: Can be topped up with engine oil.

c - Area from min. mark up to hatched field: must be topped-up, max. 0.5 l of engine oil!

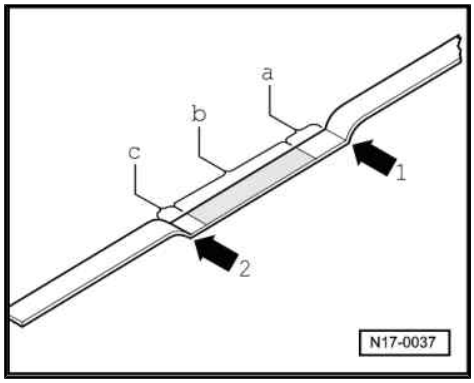

1.2.2 Part III Removing and installing oil supply line

1 - Union nut, 22 Nm
- ❑ When loosening and tightening, counterhold union.

2 - Connection
- ❑ Removing and installing ⇒ Item 5 (page 107) .

3 - Seal
- ❑ Renew

4 - Oil filter bracket

5 - Oil supply line
- ❑ To turbocharger.
- ❑ Assembly sequence ⇒ page 108

6 - Clip

7 - 25 Nm
- ❑ Renew

8 - Bracket

9 - 10 Nm

10 - 10 Nm

11 - Connection
- ❑ Removing and installing ⇒ Item 27 (page 145) .

12 - Turbocharger

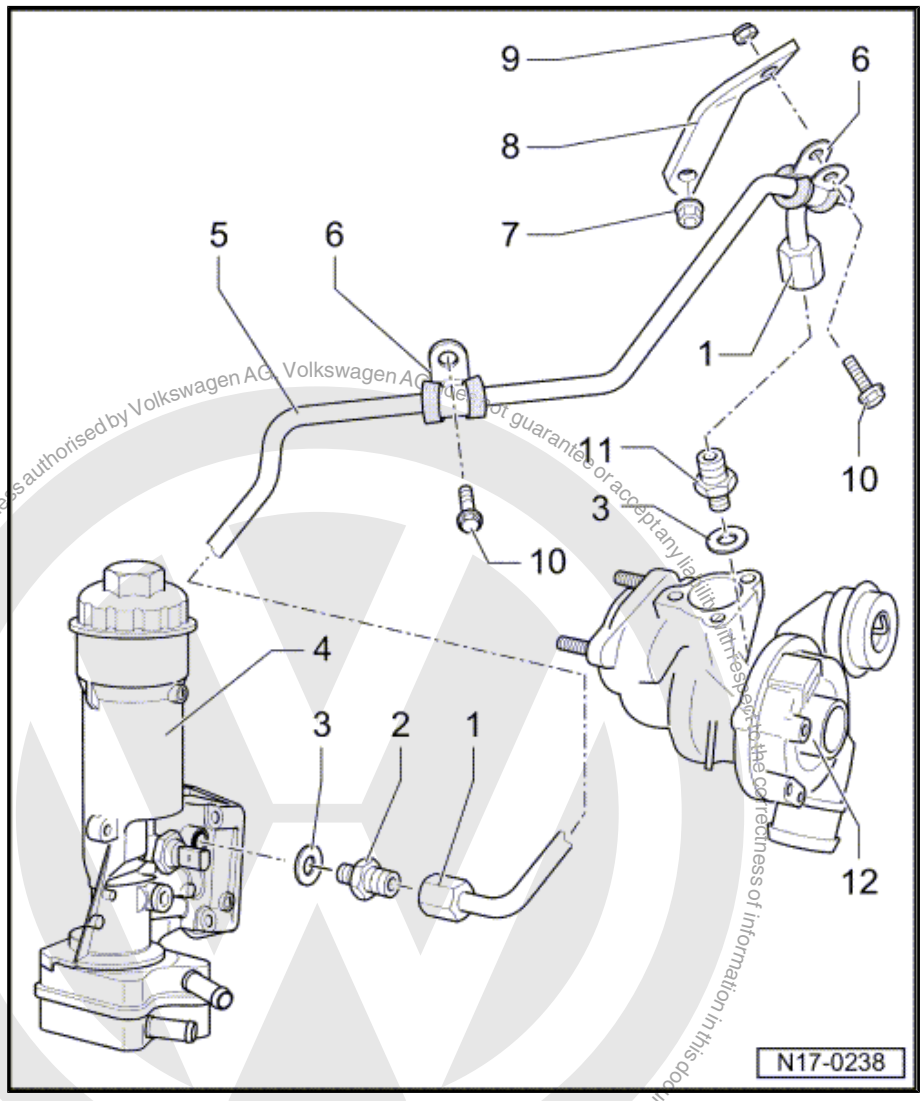

1.2.3 Installation sequence of oil supply line

Removing

– Remove noise insulation.

– Place Drip tray -V.A.G 1306- or drip tray for workshop hoist - VAS 6208- underneath.

Protected by copyright. Copying for private or commercial purposes, in part or in whole, is not permitted unless authorised by Volkswagen AG. Volkswagen AG does not guarantee or accept any liability with respect to the correctness of information in this document. Copyright by Volkswagen AG.
satelettronica

– To remove, unclip intake hose from lock carrier and unscrew from air filter housing.

– Unscrew union nut ⇒ Item 1 (page 108) from oil filter bracket ⇒ Item 4 (page 108) . When doing this counterhold connection ⇒ Item 2 (page 108) .

– Unscrew bolt ⇒ Item 10 (page 108) from face side of engine.

– Unscrew union nut ⇒ Item 1 (page 108) from turbocharger ⇒ Item 12 (page 108) . When doing this counterhold connection ⇒ Item 11 (page 108) .

– Remove bolt ⇒ Item 10 (page 108) from bracket ⇒ Item 8 (page 108) .

– Unscrew nut ⇒ Item 7 (page 108) and remove bracket ⇒ Item 8 (page 108) .

– Remove oil supply line ⇒ Item 5 (page 108) .

Installing

Installation is carried out in the reverse sequence of removal. In the process, note the following:

> ⚠ **Caution**
>
> ***The following procedure for the installation of the oil supply line must be strictly adhered to.***

– Screw bracket ⇒ Item 8 (page 108) with nut ⇒ Item 7 (page 108) loosely to exhaust manifold.

– Screw union nut ⇒ Item 1 (page 108) hand-tight on connection ⇒ Item 2 (page 108) of oil filter bracket ⇒ Item 4 (page 108) .

– Screw union nut ⇒ Item 1 (page 108) hand-tight on connection ⇒ Item 11 (page 108) of turbocharger ⇒ Item 12 (page 108) .

– Tighten union nut ⇒ Item 1 (page 108) on oil filter bracket ⇒ Item 4 (page 108) to torque setting. When doing this counterhold connection ⇒ Item 2 (page 108) .

– Tighten union nut ⇒ Item 1 (page 108) on turbocharger ⇒ Item 12 (page 108) to torque setting. When doing this counterhold connection ⇒ Item 11 (page 108) .

– Position clamps ⇒ Item 6 (page 108) on oil supply line ⇒ Item 5 (page 108) .

– Tighten bolts ⇒ Item 10 (page 108) to torque setting.

– Tighten nuts ⇒ Item 7 (page 108) to torque setting.

1.3 Removing and installing sump

Special tools and workshop equipment required

- ♦ Hand drill with plastic brush attachment
- ♦ Eye protection
- ♦ Flat scraper
- ♦ Silicone sealant -D 176 404 A2-

Removing

– Remove noise insulation tray ⇒ Rep. Gr. 50 .

– Drain engine oil.

– Remove gearbox ⇒ Rep. Gr. 34 .

satelettronica

– Remove sump.
– Loosen sump with light blows of a rubber headed hammer if necessary.
– Remove sealant residue on cylinder block with a flat scraper.
– Remove sealant residue on sump with a rotating brush, e.g. a hand drill with plastic brush attachment (wear eye protection).
– Clean sealing surfaces. They must be free of oil and grease.

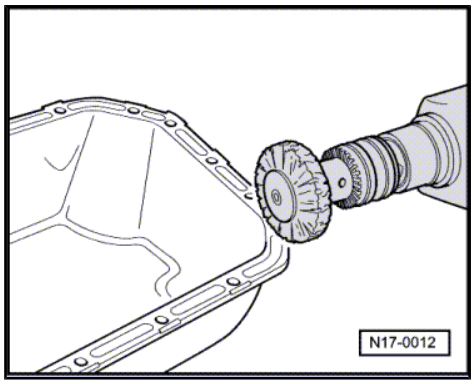

Installing

Note

- *Observe expiry date of sealing compound.*
- *The sump must be installed within 5 minutes of applying silicone sealing compound.*

– Cut off tube nozzle at forward marking (nozzle ∅ approx. 3 mm).
– Apply silicone sealing compound, as shown, to clean sealing surface on sump. Sealant bead must be:
- 2...3 mm thick.
- Run bead along inner side of bolt holes -arrows-.

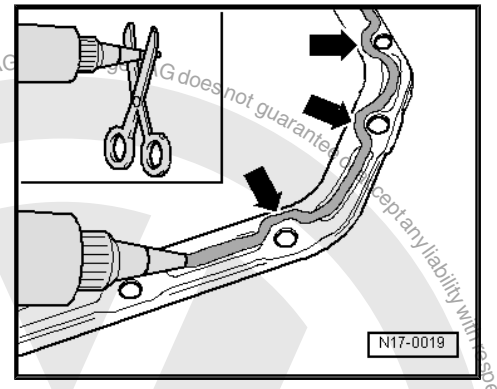

Note

The sealing compound bead must not be thicker, otherwise excess sealing compound will enter the oil sump and may block the oil suction line strainer.

– Apply silicone sealing compound bead as shown to the clean sealing surface of the sump. (The figure shows the position of the sealant bead on the cylinder block.)
– Install sump immediately and tighten all sump bolts lightly.

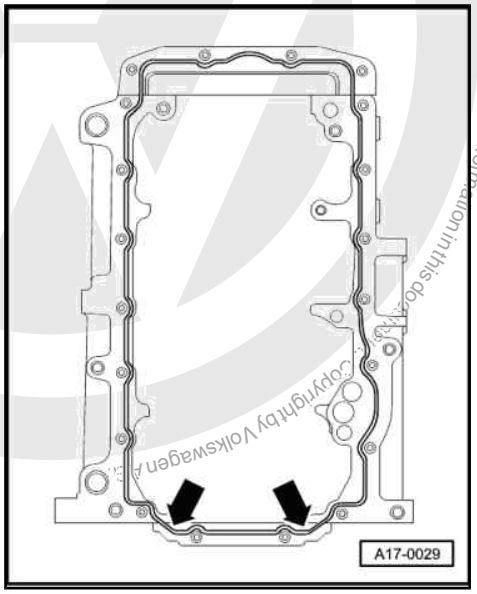

Note

The sump must be flush with cylinder block.

– Tighten sump bolts to 15 Nm.
– Install gearbox ⇒ Rep. Gr. 34 .
– Tighten sump to gearbox bolts to 45 Nm.

Note

Let sealing compound dry for approx. 30 minutes after installing oil sump. Only then fill with engine oil.

Further assembly is basically the reverse of the dismantling procedure.

1.4 Checking oil pressure and oil pressure switch

Protected by copyright. Copying for private or commercial purposes, in part or in whole, is not permitted unless authorised by Volkswagen AG. Volkswagen AG does not guarantee or accept any liability with respect to the correctness of information in this document. Copyright by Volkswagen AG.
satelettronica

Special tools and workshop equipment required

- Oil pressure tester -V.A.G 1342-
- Voltage tester -V.A.G 1527 B-
- Auxiliary measuring set -V.A.G 1594 C-

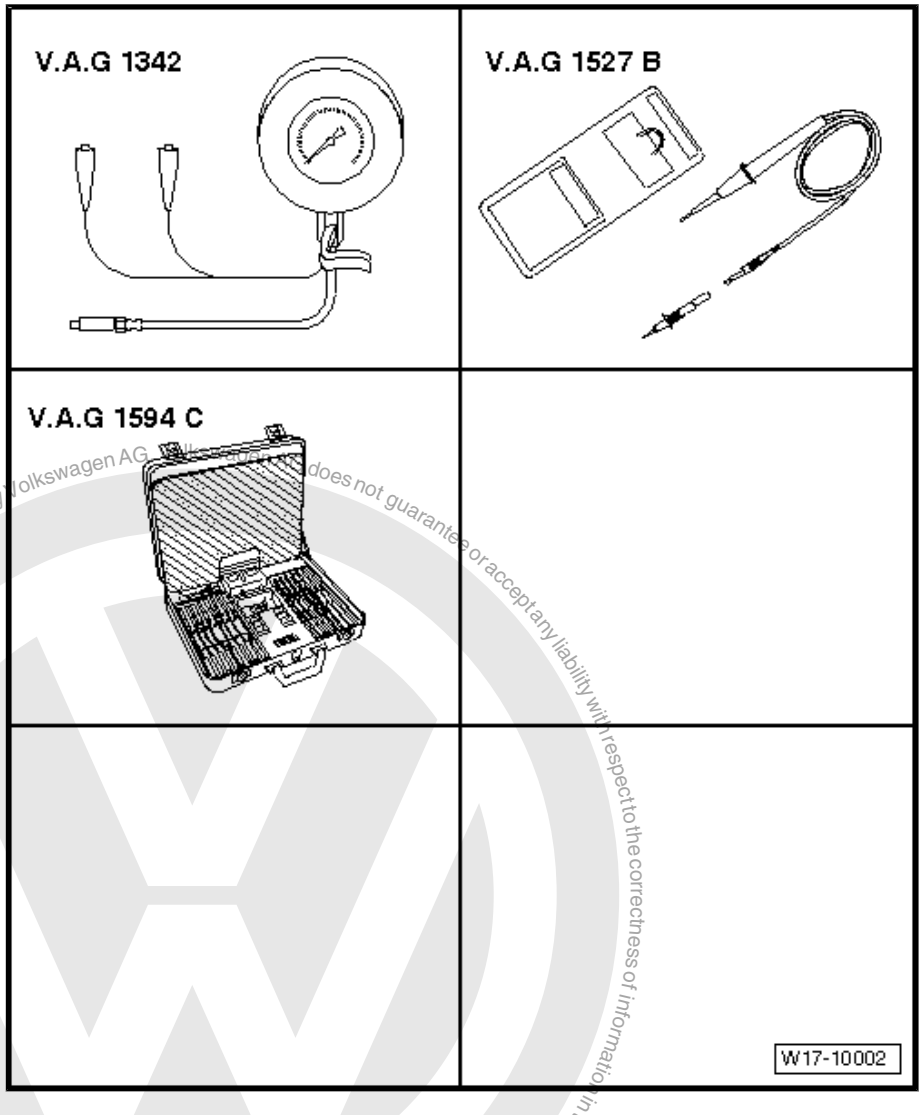

Protected by copyright. Copying for private or commercial purposes, in part or in whole, is not permitted unless authorised by Volkswagen AG. Volkswagen AG does not guarantee or accept any liability with respect to the correctness of information in this document. Copyright by Volkswagen AG.

satelettronica

Note

Functional check and repair of the visual and acoustic oil pressure warning: ⇒ Current flow diagrams, Electrical fault finding and Fitting locations.

Test sequence:

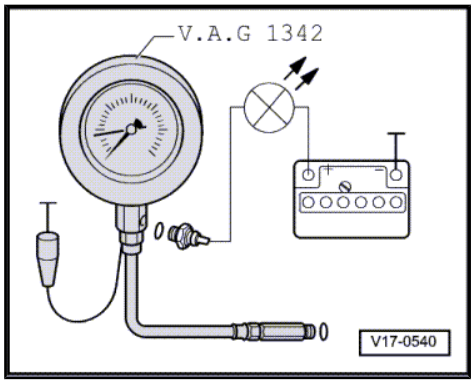

- Remove oil pressure switch -F1- and screw into oil pressure tester -V.A.G 1342- .
- Screw oil pressure tester -V.A.G 1342- into oil filter bracket in place of oil pressure switch.
- Connect brown wire of tester to earth (-).
- Connect voltage tester -V.A.G 1527 B- to battery positive (+) and oil pressure switch using cables from auxiliary test set -V.A.G 1594 C- . LED must not light up.
- Start engine and increase speed slowly. At 0.55...0.85 bar the LED must light up, otherwise renew oil pressure switch -F1- .
- Increase engine speed further. At 2000 rpm and an oil temperature of 80 °C the oil pressure should be at least 2.0 bar.

At higher engine speed, oil pressure must not exceed 5.8 bar.
Renew oil filter bracket, if necessary

Protected by copyright. Copyright for private or commercial purposes, in part or in whole, is not permitted unless authorised by Volkswagen AG. Volkswagen AG does not guarantee or accept any liability with respect to the correctness of information in this document. Copyright by Volkswagen AG.

satelettronica

19 – Cooling

1 Parts of cooling system

Note

- *When the engine is warm, the cooling system is under pressure. If necessary, release pressure before beginning repair work.*
- *Hoses are secured with spring-type clips. In case of repair, only use spring-type clips.*
- *Hose clip pliers -V.A.G 1921- or spring-type clip pliers -VAS 5024 A- are recommended for installation of spring-type clips.*

Test for leaks in cooling system using cooling system tester -V.A.G 1274- and adapter -V.A.G 1274/3- and adapter -V.A.G 1274/34- .

Parts of cooling system - body side ⇒ page 113 .

Parts of cooling system - engine side ⇒ page 115 .

Draining and filling with coolant ⇒ page 117 .

Coolant mixture specifications ⇒ page 117 .

1.1 Assembly overview - parts of cooling system, body side

Protected by copyright. Copying for private or commercial purposes, in part or in whole, is not permitted unless authorised by Volkswagen AG. Volkswagen AG does not guarantee or accept any liability with respect to the correctness of information in this document. Copyright by Volkswagen AG.
satelettronica

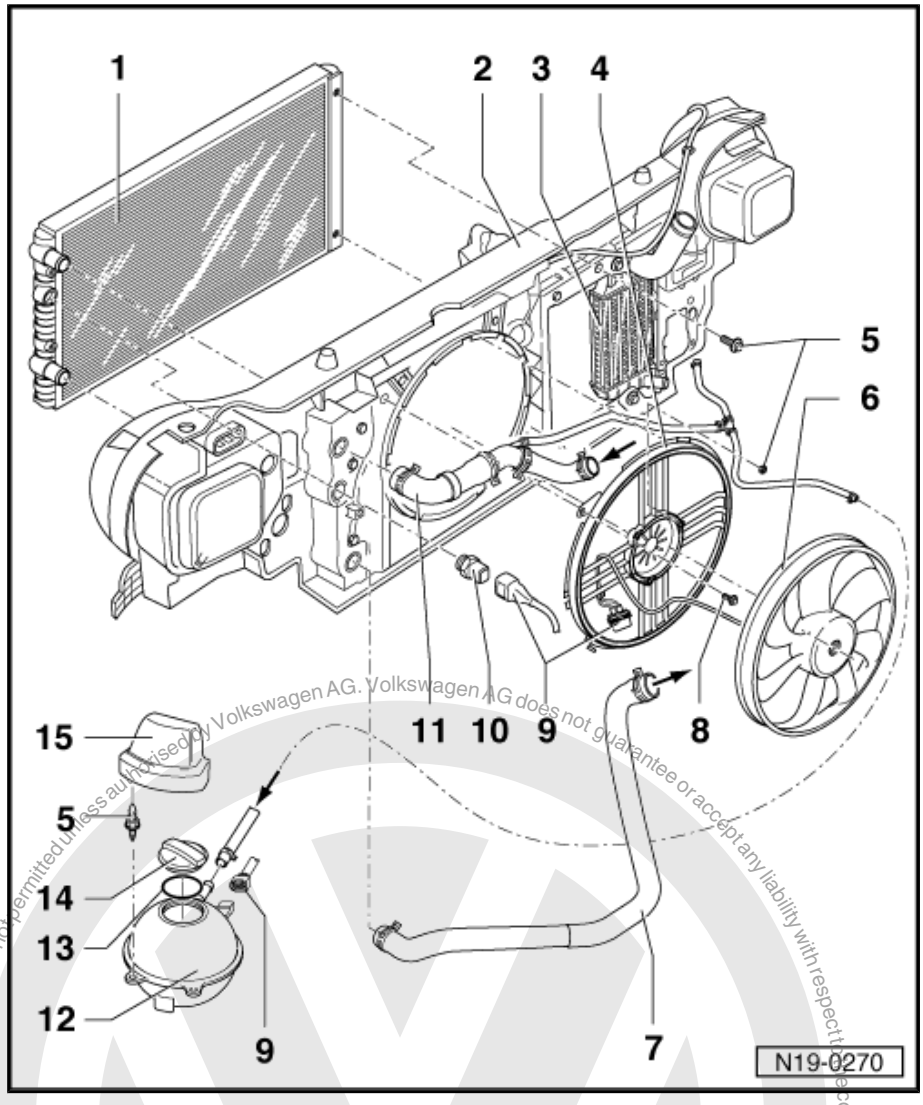

1 - Radiator
- ❑ Removing and installing ⇒ page 120 .
- ❑ If renewed, change coolant in entire system

2 - Lock carrier

3 - Charge air cooler

4 - Fan retainer

5 - 10 Nm

6 - Radiator fan

7 - Bottom coolant hose
- ❑ Coolant hose schematic diagram ⇒ page 116 .

8 - 10 Nm

9 - Connector

10 - Radiator fan thermal switch -F18- , 35 Nm
- ❑ For electric fan.
- ❑ Switching temperatures:
- ❑ 1st level on: 92...97 °C, off: 84...91 °C
- ❑ 2nd level on: 99...105 ° C, off: 91...98 °C

11 - Upper coolant hose
- ❑ Coolant hose schematic diagram ⇒ page 116 .

12 - Expansion tank
- ❑ Test for leaks in cooling system using cooling system tester -V.A.G 1274- and adapter -V.A.G 1274/3- .

13 - O-ring
- ❑ Renew if damaged.

14 - Cap
- ❑ Check using cooling system tester -V.A.G 1274- and adapter -V.A.G 1274/4- .
- ❑ Test pressure: 1.4...1.6 bar.

15 - Cover

Protected by copyright. Copying for private or commercial purposes, in part or in whole, is not permitted unless authorised by Volkswagen AG. Volkswagen AG does not guarantee or accept any liability with respect to the correctness of information in this document. Copyright by Volkswagen AG.
satelettronica

1.2 Assembly overview - parts of cooling system, engine side

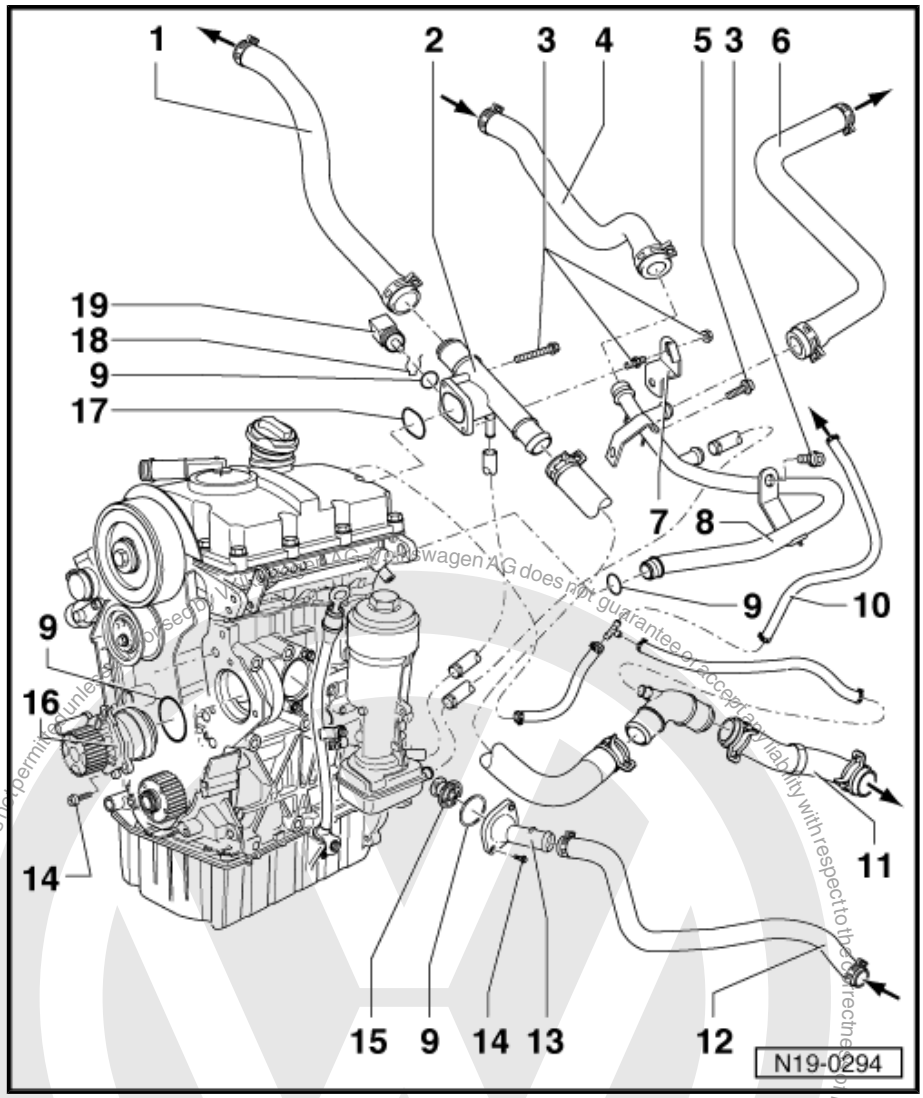

1 - Coolant hose
- ❑ To heat exchanger

2 - Connection

3 - 10 Nm

4 - Coolant hose
- ❑ From heat exchanger
- ❑ Coolant hose schematic diagram ⇒ page 116 .

5 - 25 Nm

6 - Coolant hose
- ❑ To bottom of expansion tank
- ❑ Coolant hose schematic diagram ⇒ page 116 .

7 - Bracket

8 - Coolant pipe
- ❑ Coolant hose schematic diagram ⇒ page 116 .

9 - O-ring
- ❑ Renew

10 - Coolant hose
- ❑ To top of expansion tank.
- ❑ Coolant hose schematic diagram ⇒ page 116 .

11 - Coolant hose
- ❑ To top of radiator
- ❑ Coolant hose schematic diagram ⇒ page 116 .

12 - Coolant hose
- ❑ From bottom of radiator
- ❑ Coolant hose schematic diagram ⇒ page 116 .

13 - Connection
- ❑ For thermostat.

14 - 15 Nm

15 - Thermostat
- ❑ Removing and installing ⇒ page 122 .
- ❑ Note installation position, ⇒ page 122
- ❑ Checking: heat thermostat in water.
- ❑ Opening begins at approx. 85 °C.
- ❑ Ends at approx. 105 °C.
- ❑ Opening lift min. 7 mm.

16 - Coolant pump
- ❑ Check for ease of movement.
- ❑ Note installation position.
- ❑ Removing and installing ⇒ page 121 .

Protected by copyright. Copying for private or commercial purposes, in part or in whole, is not permitted unless authorised by Volkswagen AG. Volkswagen AG does not guarantee or accept any liability with respect to the correctness of information in this document. Copyright by Volkswagen AG.
satelettronica

17 - O-ring

- ❑ Check for secure seating.
- ❑ Renew

18 - Securing clip

- ❑ Check for secure seating.

19 - Coolant temperature sender -G62-

- ❑ With coolant temperature display sender -G2- .
- ❑ Checking ⇒ page 7

1.3 Coolant hose schematic diagram

1 - Intake manifold

2 - Expansion tank

3 - Heater unit heat exchanger

4 - Coolant pipe

5 - Oil cooler

6 - Upper coolant hose

7 - Radiator

8 - Bottom coolant hose

9 - Coolant pump and thermo-stat

10 - Cylinder block/cylinder head

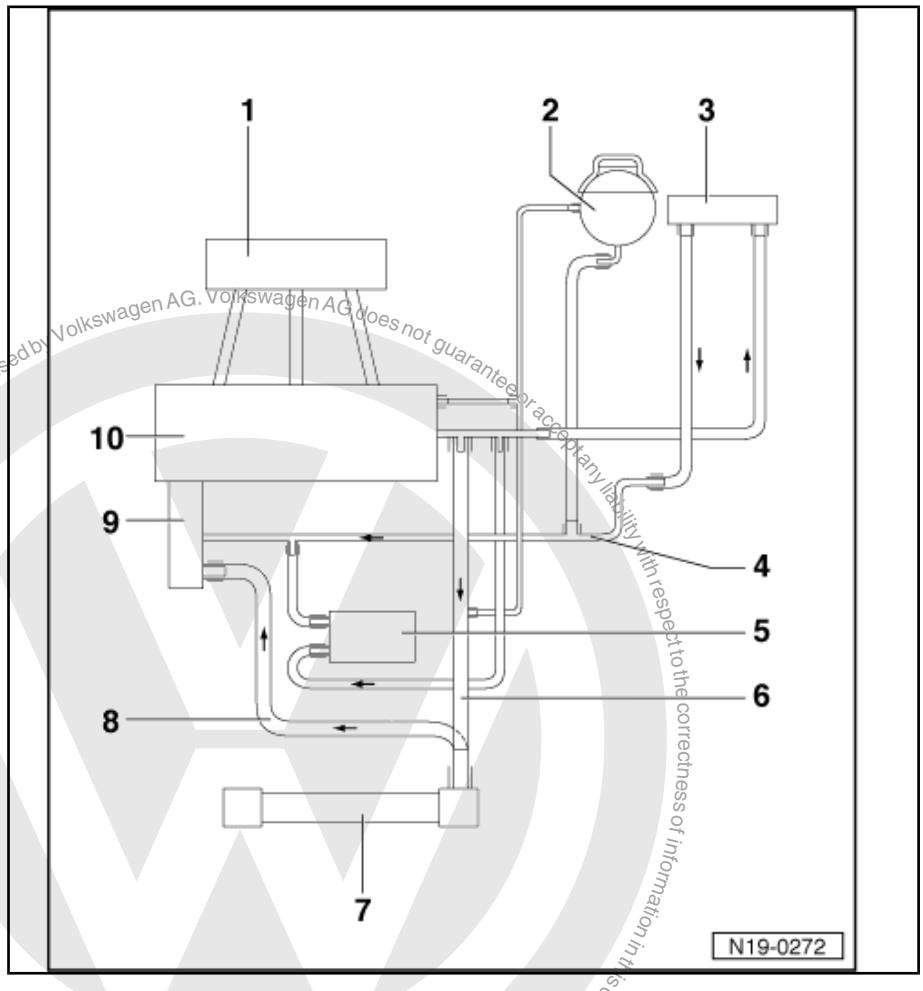

Protected by copyright. Copying for private or commercial purposes, in part or in whole, is not permitted unless authorised by Volkswagen AG. Volkswagen AG does not guarantee or accept any liability with respect to the correctness of information in this document. Copyright by Volkswagen AG.
satelettronica

Protected by copyright. Copying for private or commercial purposes, in part or in whole, is not permitted unless authorised by Volkswagen AG. Volkswagen AG does not guarantee or assume any liability with respect to the correctness of information in this document. Copyright by Volkswagen AG.

Tightening sequence, compact bracket to cylinder block

– Place compact bracket on cylinder block (observe dowel sleeve between compact bracket and cylinder block).

– First hand-tighten all securing bolts so that there is no play.

– Tighten compact bracket as shown in following tightening sequence:

1 - Tighten bolt -A- to 45 Nm

2 - Tighten bolt -B- to 45 Nm

3 - Tighten bolt -C- to 45 Nm

4 - Tighten bolt -D- to 45 Nm

5 - Tighten bolt -E- to 45 Nm

6 - Tighten bolt -F- to 45 Nm

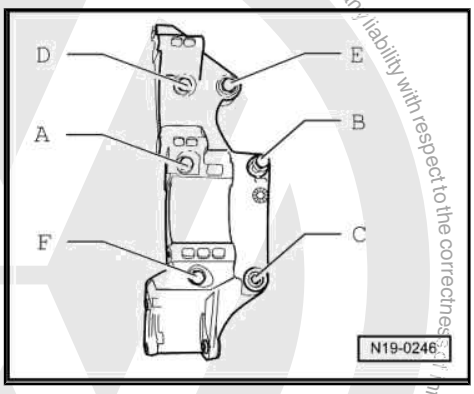

1.4 Draining and filling coolant

Special tools and workshop equipment required

- Refractometer -T10007-
- Drip tray -V.A.G 1306- or drip tray for workshop hoist -VAS 6208-
- Spring-type clip pliers -VAS 5024A-
- Cooling system charging unit -VAS 6096-

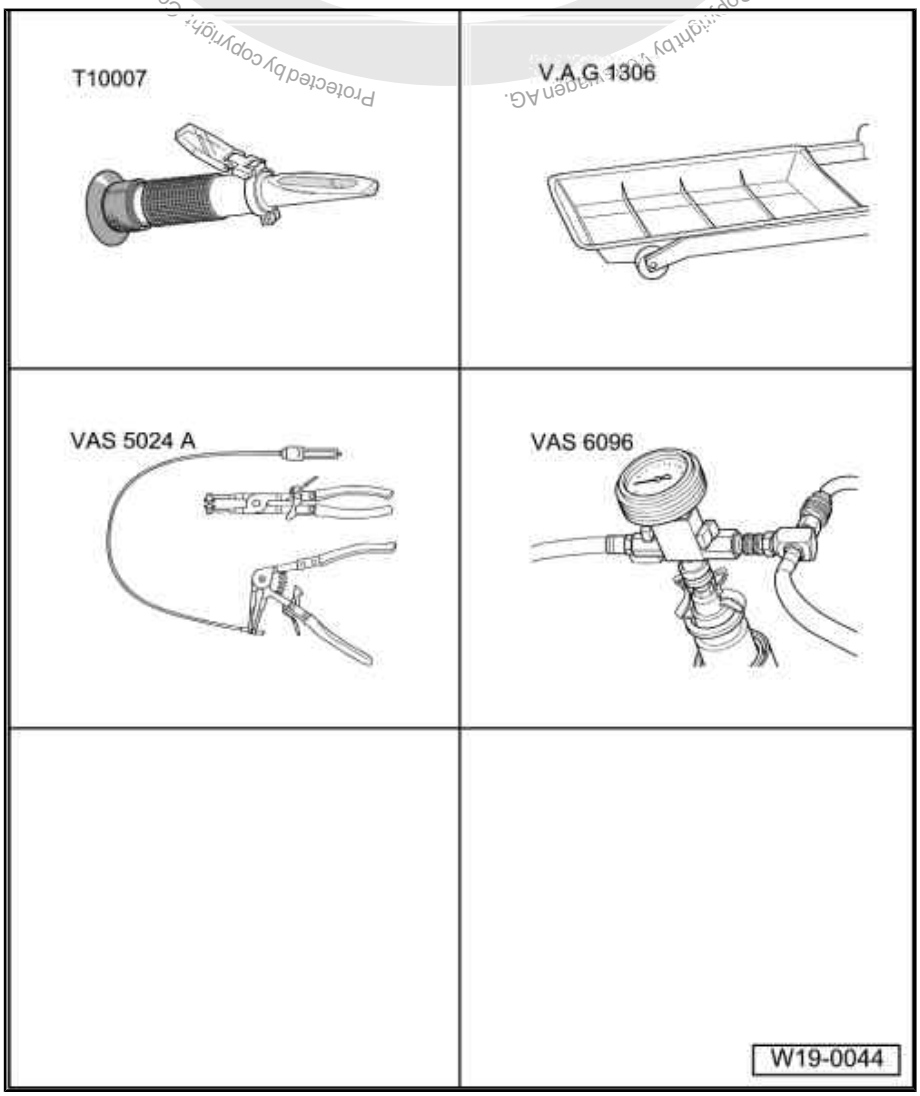

satelettronica

Draining

WARNING

Steam may escape when expansion tank is opened. Wear eye protection and protective clothing to avoid eye injuries and scalding. Cover cap with cloth and open carefully.

– Open sealing cap from coolant expansion tank.
– Remove noise insulation tray ⇒ Rep. Gr. 50 .
– Remove lower coolant hose from radiator union and drain coolant.

Protected by copyright. Copying for private or commercial purposes, in part or in whole, is not permitted unless authorised by Volkswagen AG. Volkswagen AG does not guarantee or accept any liability with respect to the correctness of information in this document. Copyright by Volkswagen AG.

satelettronica

– To drain coolant from engine, also remove coolant hoses from oil cooler -arrows-.

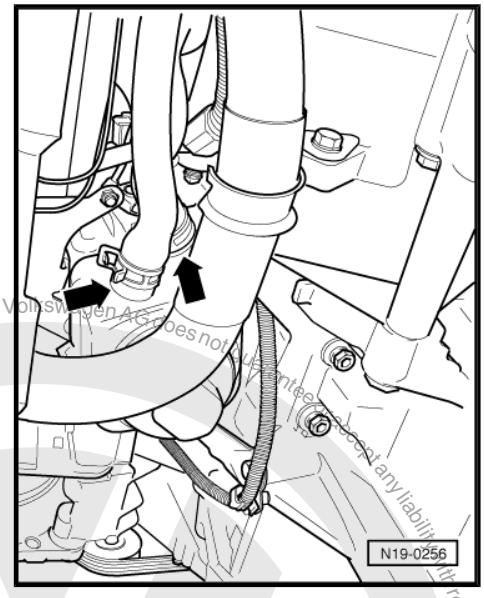

Note

Observe environmental regulations for disposal.

Filling

Note

- *Use only coolant additive G 12 in accordance with TL VW 774 F. Identification: purple colour.*
- *G 12 purple (in accordance with TL VW 774 F) can be mixed with the previous coolant additive G 12 red!*
- *G 12 and coolant additives marked "Conforming to TL VW 774 F" prevent frost and corrosion damage, scaling and also raise boiling point of coolant. Therefore, the cooling system must be filled all year round with frost and corrosion protection additives.*
- *Because of its high boiling point, the coolant improves engine reliability under heavy loads, particularly in countries with tropical climates.*
- *Frost protection is required down to about -25 °C (in countries with arctic climates: down to about -35 °C).*
- *The coolant concentration must not be reduced by adding water even in warmer seasons and in warmer countries. The coolant additive must be at least 40% of mixture.*
- *If for climatic reasons greater frost protection is required, the amount of G 12 can be increased, but only up to 60% (frost protection to about -40°C). Otherwise frost protection and cooling effectiveness are reduced again.*
- *If radiator, heat exchanger, cylinder head or cylinder head gasket is replaced, do not reuse old coolant.*

Recommended mixture proportions:

Frost protection to	Anti-freeze proportion	G 12[12)]	Water[12)]
-25 °C	40 %	2.0 l	3.0 l
-35 °C	50 %	2.5 l	2.5 l

12) The quantity of coolant can vary depending upon vehicle equipment.

– Secure lower coolant hose onto radiator union.

– Connect coolant hoses to oil cooler.

– Install noise insulation tray ⇒ Rep. Gr. 50 .

With cooling system charge unit -VAS 6096-

– Screw a suitable adapter from cooling system tester -V.A.G 1274- onto expansion tank.

– Fill coolant circuit using cooling system charge unit -VAS 6096- ⇒ operating instructions for cooling system charge unit -VAS 6096- .

Without cooling system charge unit -VAS 6096-

Protected by copyright. Copying for private or commercial purposes, in part or in whole, is not permitted unless authorised by Volkswagen AG. Volkswagen AG does not guarantee or accept any liability with respect to the correctness of information in this document. Copyright by Volkswagen AG.
satelettronica

- Fill with coolant up to max. mark on expansion tank.
- Fit expansion tank cap.
- Turn off heater control.
- Start engine and maintain an engine speed of about 2000 rpm for about 3 minutes.
- Run engine until radiator fan cuts-in.
- Check coolant level and top-up if necessary. When the engine is at normal operating temperature, the coolant level must be on the max. mark; when the engine is cold, between the min. and max. marks.

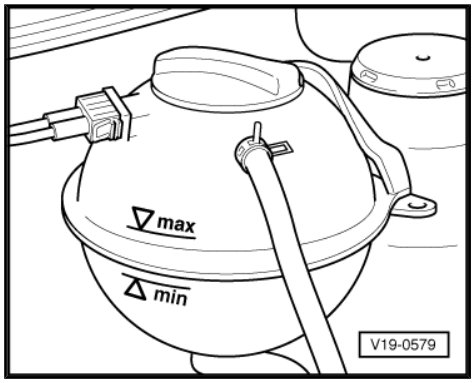

1.5 Removing and installing radiator

Special tools and workshop equipment required

- Refractometer -T10007-
- Drip tray -V.A.G 1306- or drip tray for workshop hoist -VAS 6208-
- Torque wrench -V.A.G 1331-
- Spring-type clip pliers -VAS 5024A-

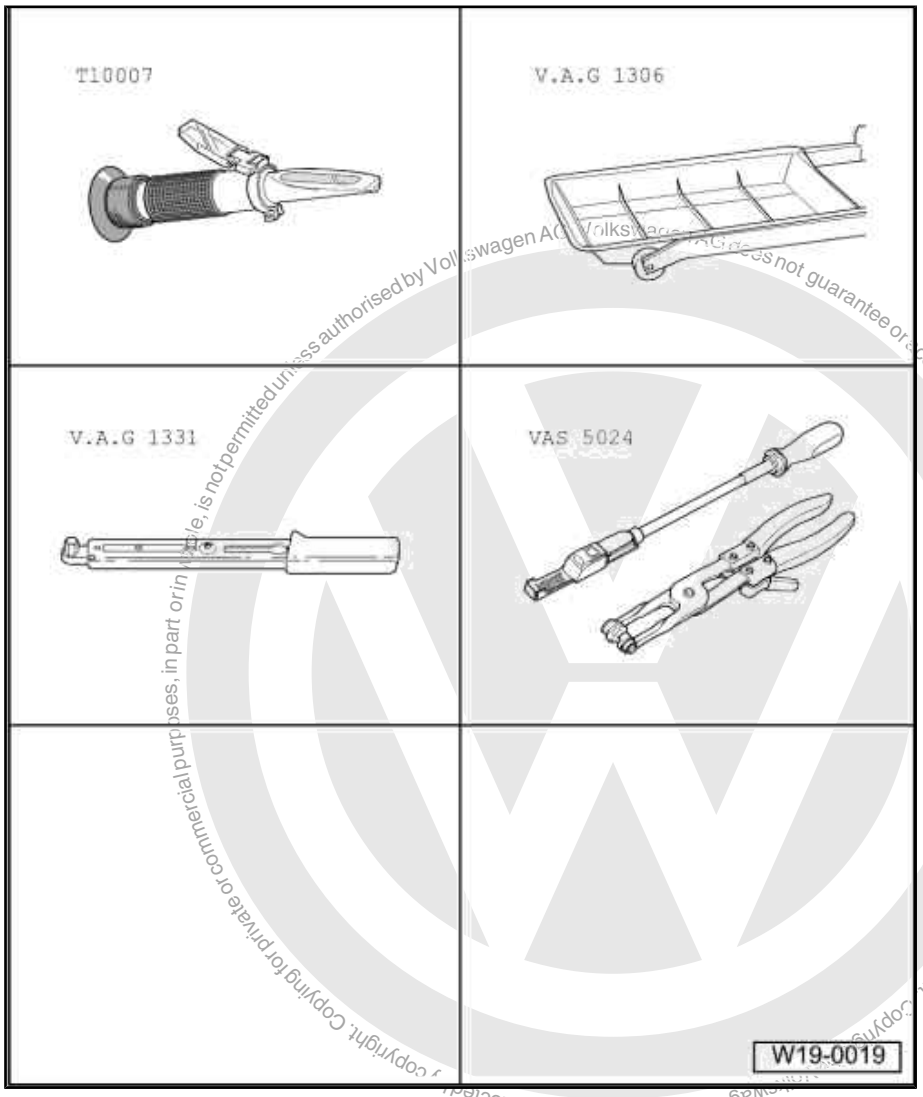

Removing

- Remove front bumper ⇒ Rep. Gr. 63
- Drain coolant ⇒ page 117 .
- Pull coolant hoses off radiator.
- Pull connector off thermal switch.

Protected by copyright. Copying for private or commercial purposes, in part or in whole, is not permitted unless authorised by Volkswagen AG. Volkswagen AG does not guarantee or accept any liability with respect to the correctness of information in this document. Copyright by Volkswagen AG.
satelettronica

– Remove radiator securing bolts and take out radiator downwards.

Installing

Installation is carried out in the reverse order. When installing, note the following:

– Fill with coolant ⇒ page 117 .

1.6 Removing and installing coolant pump

Special tools and workshop equipment required

- Refractometer -T10007-
- Drip tray -V.A.G 1306- or drip tray for workshop hoist -VAS 6208-
- Torque wrench -V.A.G 1331-
- Spring-type clip pliers -VAS 5024A-

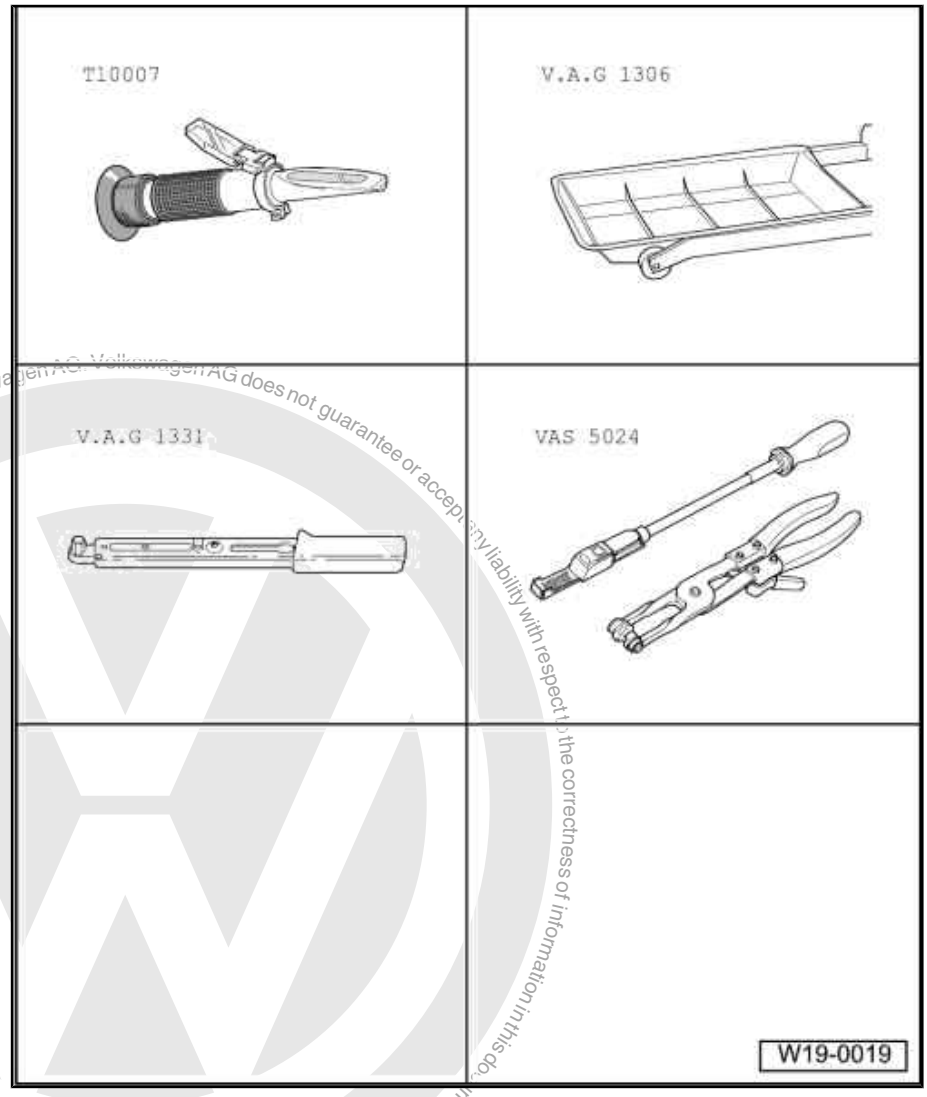

Protected by copyright. Copying for private or commercial purposes, in part or in whole, is not permitted unless authorised by Volkswagen AG. Volkswagen AG does not guarantee or accept any liability with respect to the correctness of information in this document. Copyright by Volkswagen AG.

Removing

Note

Always renew seals and gaskets.

– Drain coolant ⇒ page 117 .
– Remove poly V-belt ⇒ page 55 .
– Remove toothed belt ⇒ page 79 .

satelettronica

– Remove coolant pump securing bolts -1- and carefully remove coolant pump -2-.

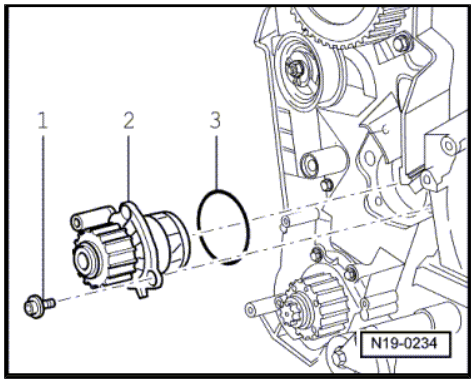

Installing

Installation is carried out in the reverse order. When installing, note the following:

– Moisten new O-ring -3- with coolant.

– Insert coolant pump -2- into cylinder block and tighten securing bolts -1-.

Torque setting: 15 Nm

Note

The coolant pump plug faces downwards.

– Install and tension toothed belt ⇒ page 79 .

– Install poly V-belt ⇒ page 55 .

– Fill with coolant ⇒ page 117 .

1.7 Removing and installing thermostat

Special tools and workshop equipment required

- Refractometer -T10007-
- Drip tray -V.A.G 1306- or drip tray for workshop hoist -VAS 6208-
- Torque wrench -V.A.G 1331-
- Spring-type clip pliers -VAS 5024A-

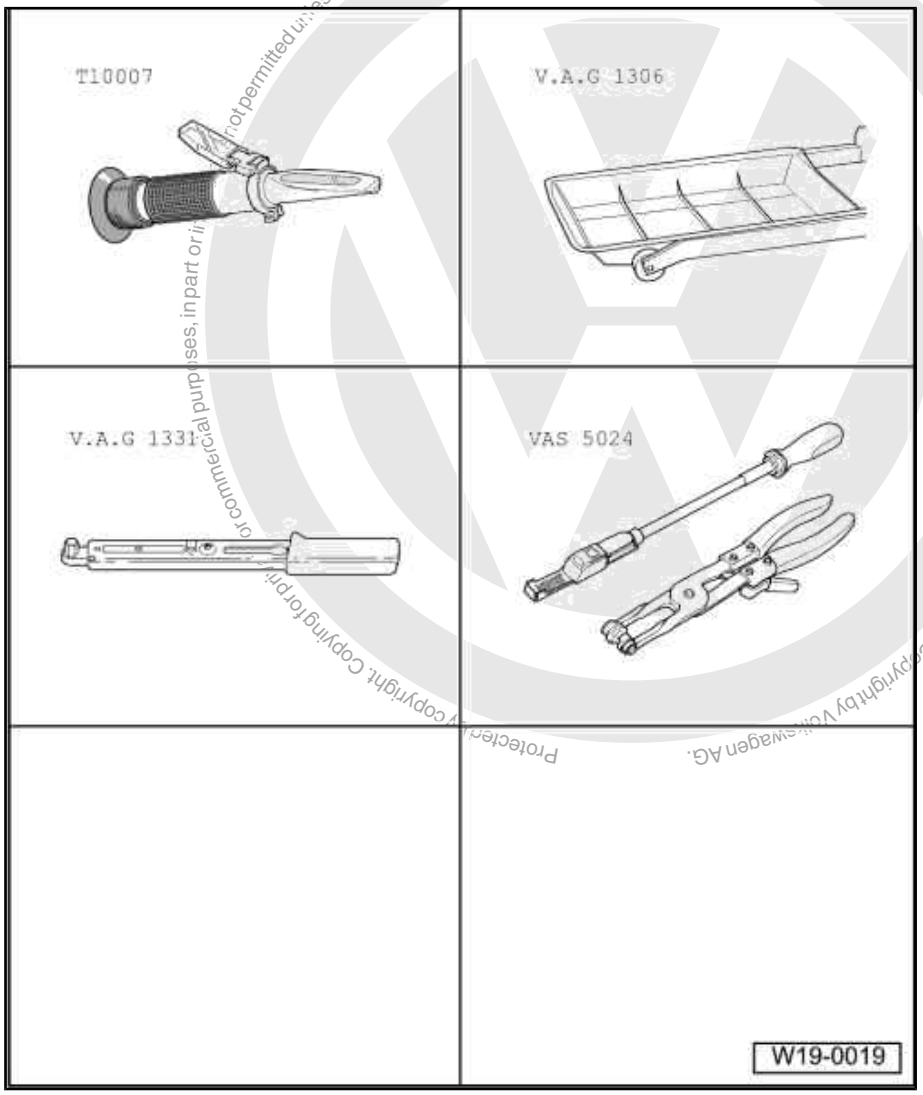

Protected by copyright. Copying for private or commercial purposes, in part or in whole, is not permitted unless authorised by Volkswagen AG. Volkswagen AG does not guarantee or accept any liability with respect to the correctness of information in this document. Copyright by Volkswagen AG.
satelettronica

Removing

Note

Always renew seals and gaskets.

- Drain coolant ⇒ page 117 .
- Remove alternator ⇒ Rep. Gr. 27 .
- Pull coolant hose off connection.
- Remove connecting flange -2- securing bolts -1- and remove connecting flange -2- with thermostat -4-.
- Turn thermostat -4- $^1/_4$ turn (90°) to left and remove from connection -2-.

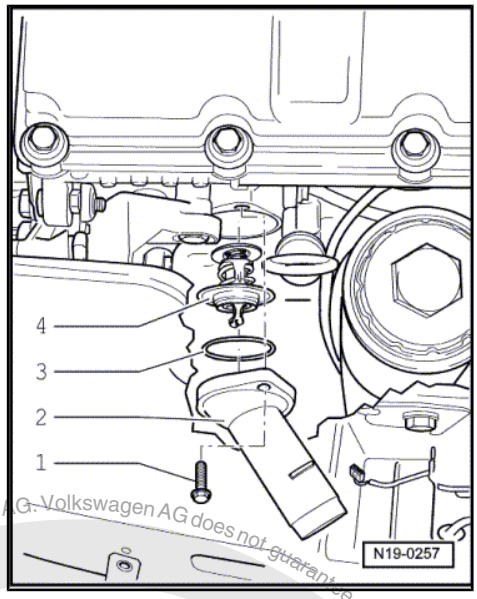

Installing

Installation is carried out in the reverse order. When installing, note the following:

- Moisten new O-ring -3- with coolant.
- Insert thermostat -4- into union -2- and turn $^1/_4$ turn (90°) to right.

Note

The brace on the thermostat must be almost vertical.

- Fit connection -2- with thermostat -4- into engine block.
- Tighten securing bolts -1-. Torque setting: 15 Nm
- Fill with coolant ⇒ page 117 .

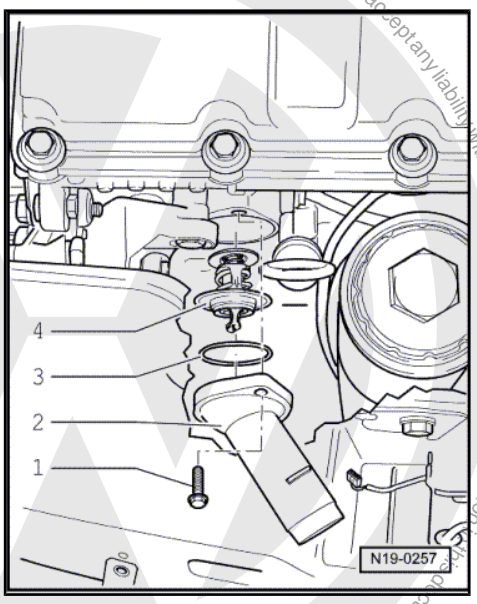

Protected by copyright. Copying for private or commercial purposes, in part or in whole, is not permitted unless authorised by Volkswagen AG. Volkswagen AG does not guarantee or accept any liability with respect to the correctness of information in this document. Copyright by Volkswagen AG.
satelettronica

20 – Fuel supply system

1 Parts of fuel supply system

Note

- *Hose connections are secured with either spring-type or clamp-type clips.*
- *Always renew clamp-type clips with spring-type clips.*
- *Spring-type clip pliers -VAS 5024A- or hose clip pliers -V.A.G 1921- are recommended for installation of spring-type clips.*

Observe safety precautions ⇒ page 128 .

Observe rules for cleanliness ⇒ page 128 .

Repairing fuel filter ⇒ page 126 .

Repairing accelerator mechanism ⇒ page 130

1.1 Assembly overview - fuel tank with attachments

1 - Cap

2 - Securing clip

3 - Seal

- ❑ Renew if damaged.

4 - Tank flap unit

- ❑ Removing and installing: ⇒ Rep. Gr. 55 .

5 - Breather line

6 - Gravity/overflow valve

- ❑ To remove, release locking lug and unclip valve upwards out of filler neck
- ❑ Check valve for through-flow valve vertical: open, valve tilted 45°: closed

7 - O-ring

- ❑ Renew if damaged.

8 - Earth connection

- ❑ Check for secure seating.

9 - 10 Nm

10 - Filler neck

- ❑ With non-return valve.

11 - Protective boot

- ❑ After installing filler neck push over fuel tank filler neck

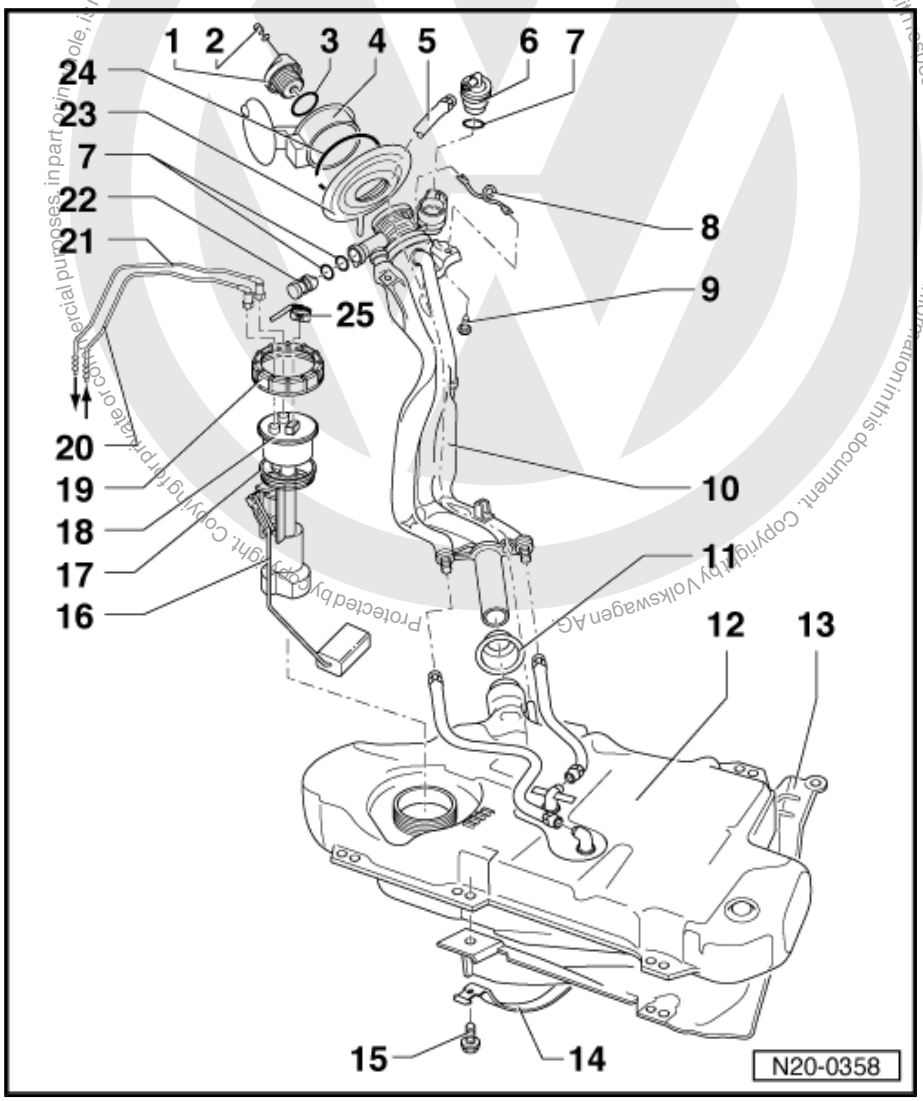

Protected by copyright. Copying for private or commercial purposes, in part or in whole, is not permitted unless authorised by Volkswagen AG. Volkswagen AG does not guarantee or accept any liability with respect to the correctness of information in this document. Copyright by Volkswagen AG

satelettronica

12 - Fuel tank

- ❑ When removing, support using engine and gearbox jack -V.A.G 1383 A-
- ❑ Removing and installing ⇒ page 129 .

13 - Heat shield

- ❑ Press lock washer from heat shield firmly to pin on vehicle floor.

14 - Securing strap

- ❑ Note differing lengths.

15 - 25 Nm

16 - Fuel gauge sender

- ❑ Note installation position on fuel tank ⇒ page 126 .

17 - Seal

- ❑ Renew if damaged.
- ❑ Moisten with fuel when installing.

18 - Flange

- ❑ Note installation position on fuel tank ⇒ page 126 .

19 - Union nut

- ❑ Remove and install using union nut tool -3217-

20 - Return line

- ❑ From fuel cooler ⇒ page 128
- ❑ Blue or with blue marking.
- ❑ Clipped onto fuel tank.
- ❑ Check for secure seating.
- ❑ To pull off flange, press release button on connecting piece.

21 - Supply line

- ❑ To fuel filter ⇒ Item 2 (page 127) .
- ❑ Clipped onto fuel tank.
- ❑ Check for secure seating.
- ❑ Black
- ❑ To pull off flange, press release button on connecting piece.

22 - Breather valve

- ❑ Checking ⇒ page 126
- ❑ To remove valve unclip sideways out of support.
- ❑ Unscrew cap before installing

23 - Cup

- ❑ For filler neck

24 - Retaining ring

25 - Connector

- ❑ Black, 2-pin.

Protected by copyright. Copyright by Volkswagen AG. Volkswagen AG does not guarantee or accept any liability with respect to the correctness of information in this document. Copyright by Volkswagen AG. Volkswagen AG does not guarantee or accept any liability with respect to the correctness of information in this document. Copyright by Volkswagen AG. Volkswagen AG does not guarantee or accept any liability with respect to the correctness of information in this document. Copyright by Volkswagen AG.
satelettronica

Installation position of fuel gauge sender

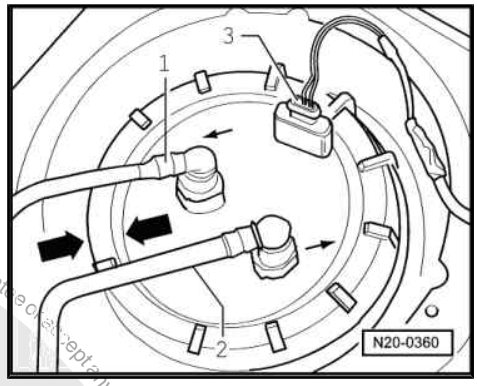

Marking on sender must align with the marking on fuel tank -arrows-.

Connections for blue or blue-marked return line -1- and black supply line -2- are marked with an arrow on fuel gauge sender flange.

Note

After installing fuel gauge sender, check whether fuel supply and return lines are still clipped onto fuel tank.

Checking breather valve

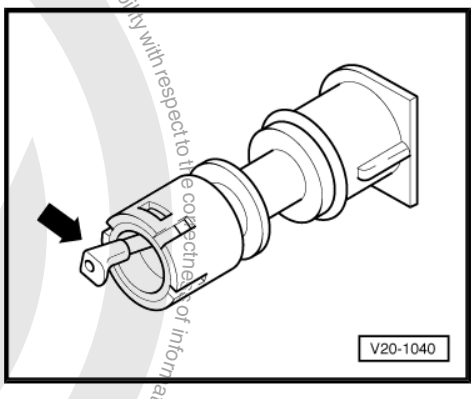

Lever in rest position: closed.

Lever pushed in direction of arrow: open.

Note

Before installing breather valve remove fuel tank cap.

1.2 Assembly overview - fuel filter

Protected by copyright. Copying for private or commercial purposes, in part or in whole is not permitted unless authorised by Volkswagen AG. Volkswagen AG does not guarantee or accept any liability with respect to the correctness of information in this document. Copyright by Volkswagen AG.

satelettronica

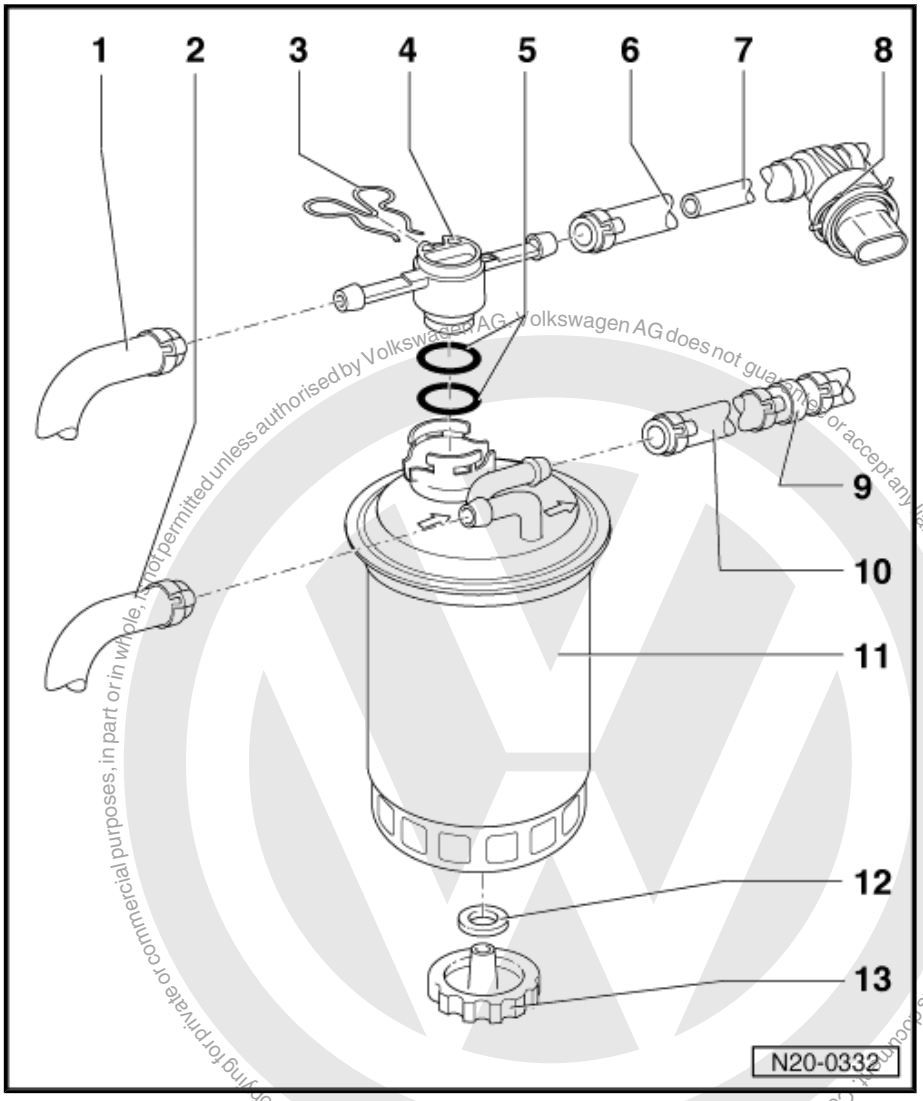

1 - Return line

- ❑ To fuel cooler ⇒ page 128
- ❑ Blue or with blue marking.
- ❑ Check for secure seating.

2 - Supply line

- ❑ From fuel tank ⇒ Item 21 (page 125) .
- ❑ White or with white marking.
- ❑ Check for secure seating.

3 - Securing clip

4 - Control valve

- ❑ Installation position: arrow points towards fuel tank
- ❑ When changing filter, remove securing clip and take control valve off complete with fuel lines
- ❑ Below + 15 °C: Passage to filter open
- ❑ Over + 31 °C: Passage to filter closed

5 - O-ring

- ❑ Renew

6 - Return line

- ❑ From tandem pump ⇒ Item 18 (page 53)
- ❑ Check for secure seating.
- ❑ Blue or with blue marking.

7 - Fuel line

8 - Fuel temperature sender -G81-

- ❑ Checking ⇒ page 173

9 - Non-return valve

- ❑ Installation position: arrow points towards tandem pump

10 - Supply line

- ❑ To tandem pump ⇒ Item 17 (page 53) .
- ❑ Check for secure seating.
- ❑ White or with white marking.

11 - Fuel filter

- ❑ Fill with diesel fuel before installing
- ❑ Direction of flow is marked with arrows.
- ❑ Do not interchange connections.
- ❑ Renew if damaged.

12 - Seal

- ❑ Renew if damaged.

Protected by copyright. Copying for private or commercial purposes, in part or in whole, is not permitted unless authorised by Volkswagen AG. Volkswagen AG does not guarantee or accept any liability with respect to the correctness of information in this document. Copyright by Volkswagen AG.
satelettronica

13 - Water drain screw

- ❑ To bleed remove control valve securing clip and take control valve off complete with fuel lines
- ❑ Loosen and allow approx. 100 cm^3 fluid to drain

1.3 Safety precautions when working on fuel supply system

When removing and installing the fuel gauge sender -G- from a full or partly full fuel tank the following must be observed:

- ♦ Before beginning work, place an extraction hose close to sender opening in fuel tank to extract escaping fuel fumes and switch on exhaust extraction system. If no exhaust extraction system is available, a radial fan with a displacement greater than 15 m^3/h can be used providing that motor is not in air flow.
- ♦ Prevent skin contact with fuel! Wear fuel-resistant gloves!

1.4 Rules for cleanliness

When working on the fuel supply and injection systems, pay careful attention to the following “6 rules” for cleanliness:

- ♦ Thoroughly clean all unions and adjacent areas before disconnecting.
- ♦ Place removed parts on a clean surface and cover. Do not use fluffy cloths!
- ♦ Carefully cover opened components or seal if repairs cannot be carried out immediately.
- ♦ Install clean components only. Do not remove replacement parts from packing until immediately before installing. Do not use parts that have not been stored in their packing (e.g. in tool boxes etc.).
- ♦ When system is open: do not work with compressed air if this can be avoided. Do not move vehicle unless absolutely necessary.
- ♦ Also ensure that no diesel fuel comes into contact with the coolant hoses. Should this occur, the hoses must be cleaned immediately. Damaged hoses must be renewed.

1.5 Removing and installing fuel cooler

Special tools and workshop equipment required

- ♦ Torque wrench -V.A.G 1331-

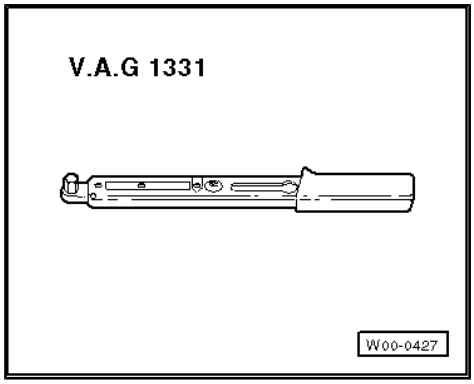

Removing:

Observe rules for cleanliness ⇒ page 128 .

Volkswagen AG, Volkswagen AG does not guarantee or accept any liability with respect to the correctness of information in this document. Copyright by Volkswagen AG.
Photocopy copying for private or commercial purposes, in part or in whole, is not permitted unless authorised by Volkswagen AG.
satelettronica

Note

The fuel cooler is located in the return line to tank. It is located on the vehicle underbody.

– Separate fuel lines at fuel cooler.
– Remove securing nuts -arrows-.

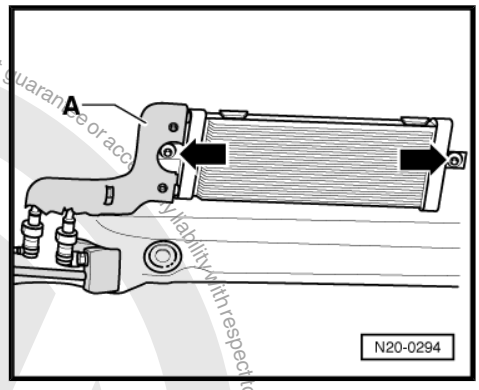

Installing:

Installation is carried out in the reverse sequence of removal. In the process, note the following:

♦ Tighten fuel cooler securing nuts to 15 Nm.

1.6 Removing and installing fuel tank

Special tools and workshop equipment required

♦ Torque wrench -V.A.G 1331-

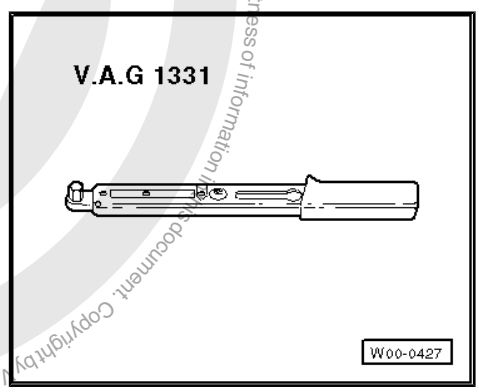

♦ Engine and gearbox jack -V.A.G 1383 A-

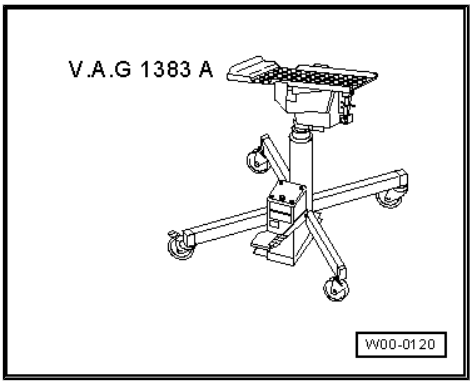

Removing

– Note safety precautions before beginning work ⇒ page 128 .

Note

Before carrying out further work, disconnect battery earth strap. First check whether a coded radio is fitted. Obtain anti-theft code first if necessary.

Protected by copyright. Copying for private or commercial purposes, in part or in whole, is not permitted unless authorised by Volkswagen AG. Volkswagen AG does not guarantee or accept any liability with respect to the correctness of information in this document. Copyright by Volkswagen AG.
satelettronica

– With the ignition switched off, disconnect battery earth strap.
– Fold rear seat bench forwards.
– Remove cover under bench seat.
– Disconnect fuel return line -1- (blue) and fuel supply line -2- from flange.

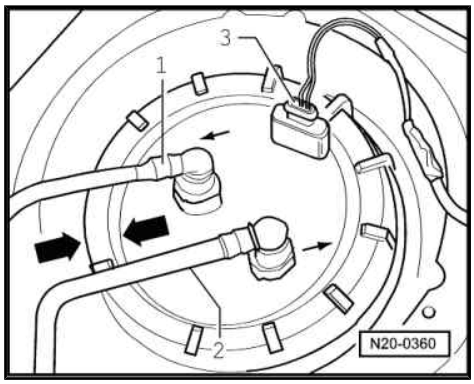

Note

Press buttons on hose couplings -arrows- to do this.

– Pull off connector -3-.
– Open fuel tank flap.
– Drain fuel tank and clean fuel filler neck and surrounding area.
– Unhook front and rear silencer and if necessary hang to body with suitable wire.
– Unbolt rear wheel (right-side).
– Unbolt filler neck from body.
– Remove cap from filler neck and unclip filler neck from cup
– Remove tensioning straps. When doing this, support fuel tank with engine and gearbox jack -V.A.G 1383 A- .
– Remove filler neck.
– Remove fuel tank together with heat shield.

Installing

Installation is carried out in the reverse sequence of removal. In the process, note the following:

♦ Route breather hose without kinking.
♦ Do not interchange supply and return hose (return hose blue or blue markings, supply hose black).
♦ Clip supply and return lines onto fuel tank.

Connections for blue or blue-marked return line -1- and black supply line -2- are marked with an arrow on fuel gauge sender flange.

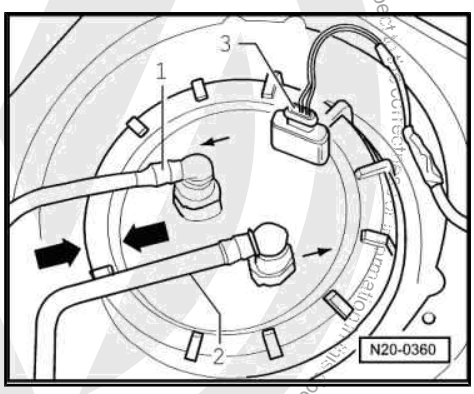

1.7 Accelerator mechanism

1.7.1 Assembly overview - left-hand drive vehicles

Right-hand drive vehicles ⇒ page 132

Protected by copyright. Copyright by Volkswagen AG. Volkswagen AG does not guarantee or accept any liability with respect to the correctness and completeness of this document. Copyright by Volkswagen AG.
satelettronica

1 - Mounting bracket

- ❑ Removing and installing ⇒ Rep. Gr. 46 .

2 - Connector

- ❑ Black, 6-pin.

3 - Accelerator position sender -G79-

- ❑ Not adjustable.
- ❑ The accelerator position sender -G79- transmits the driver's input to the engine control unit.
- ❑ Remove footwell cover to remove sender.
- ❑ Checking ⇒ page 133

4 - 10 Nm

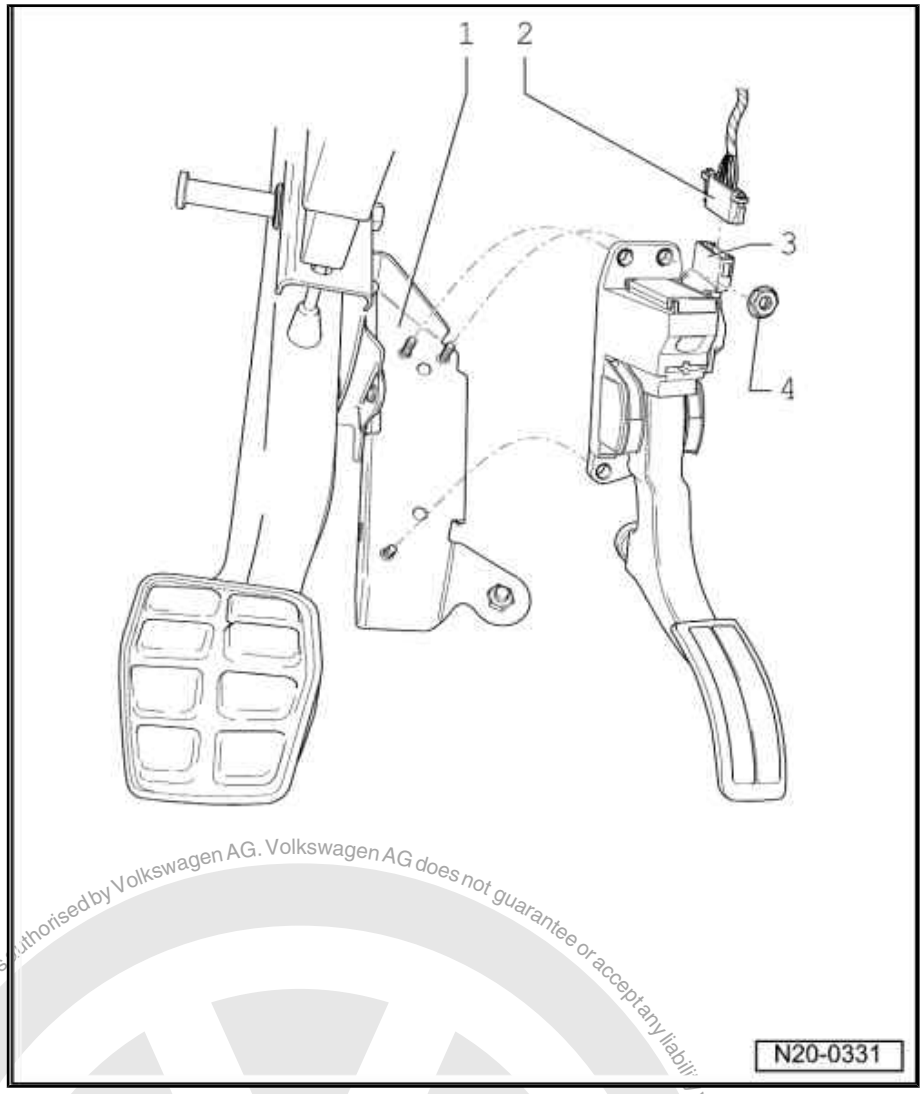

Protected by copyright. Copying for private or commercial purposes, in part or in whole, is not permitted unless authorised by Volkswagen AG. Volkswagen AG does not guarantee or accept any liability with respect to the correctness of information in this document. Copyright by Volkswagen AG.

satelettronica

1.7.2 Assembly overview - vehicles with right-hand drive

1 - 10 Nm

2 - Accelerator position sender -G79-

- ❑ Checking ⇒ page 133
- ❑ Adjusting ⇒ page 136

3 - Cable cam

4 - Washer

5 - 10 Nm

6 - Bolt link

7 - Mounting bracket

- ❑ Removing and installing ⇒ Rep. Gr. 46 .

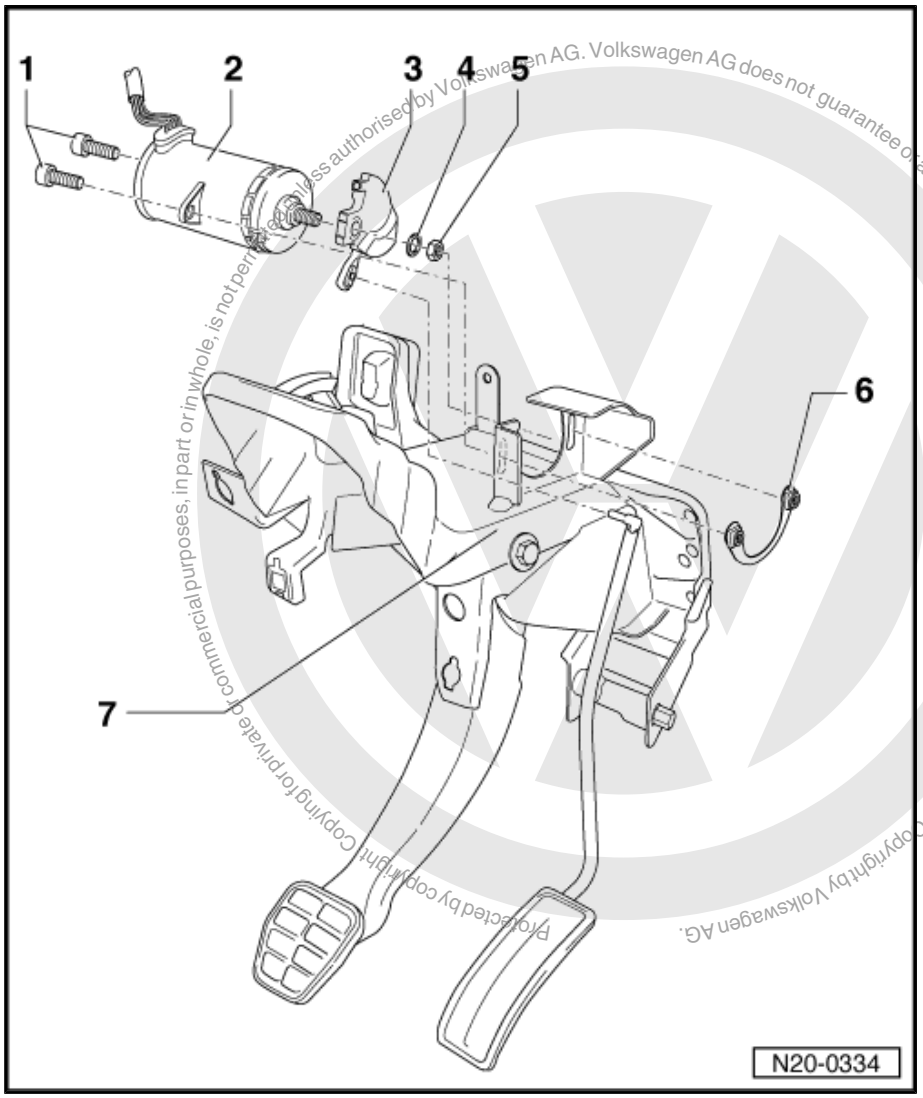

Protected by copyright. Copying for private or commercial purposes, in part or in whole, is not permitted unless authorised by Volkswagen AG. Volkswagen AG does not guarantee or accept any liability with respect to the correctness of information in this document. Copyright by Volkswagen AG.
satelettronica

1.8 Checking accelerator position sender -G79-

Special tools and workshop equipment required

- Hand multimeter -V.A.G 1526C- or hand multimeter -V.A.G 1526 A-
- Auxiliary measuring set -V.A.G 1594C- or auxiliary measuring set -V.A.G 1594 A-
- Adapter cable, 121-pin -V.A.G 1598/31-
- Fault reader -V.A.G 1551- or vehicle diagnosis, testing and information system -VAS 5051B- (not illustrated)
- Current flow diagram

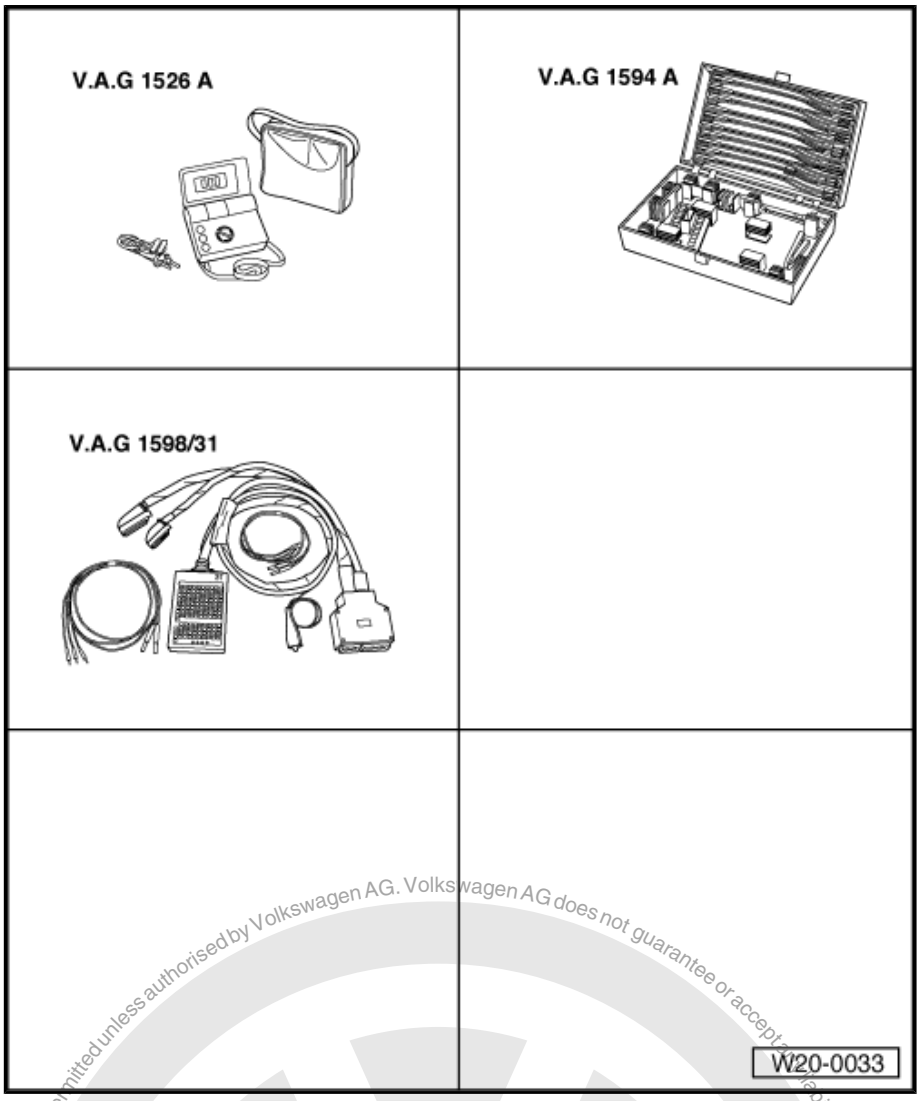

1.8.1 Right-hand drive vehicles

Left-hand drive vehicles ⇒ page 135

Test procedure

– Connect fault reader -V.A.G 1551- or vehicle diagnosis, testing and information system -VAS 5051B- and select engine electronics control unit with "address word 01". The ignition must be switched on for this purpose.

Indicated on display:

```
Rapid data transfer                HELP
Select function XX
```

– Press buttons 0 and 8 for function "Read measured value block" and confirm entry with Q button.

Indicated on display:

```
Read measured value block          HELP
Input display group number XXX
```

– Press buttons 0, 0 and 2 for "display group number 2" and confirm entry with Q button.

Protected by copyright. Copying for private or commercial purposes, in part or in whole, is not permitted unless authorised by Volkswagen AG. Volkswagen AG does not guarantee or accept any liability with respect to the correctness of information in this document. Copyright by Volkswagen AG.
satelettronica

– Check accelerator position display in display zone 2. The accelerator pedal must not be depressed. Specification: 0.0 %

```
Read measured value block 2          ->
0 rpm   0.0 %   0 1 0          18.4 °C
```

– In addition check the idling speed switch display in display zone 3. The middle position must show 1. Display: 010

– Depress accelerator pedal slowly until fully down, and observe display zones 2 and 3.

```
Read measured value block 2          ->
0 rpm   100.0 %   0 0 0        18.4 °C
```

♦ Display zone 2: The accelerator pedal position value must increase continuously. Specification at full throttle position: 100 %

♦ Display zone 3: The middle position must change to 0. Display: 000

End specification value not achieved:

– Press the [→] button.

– Press buttons [0] and [6] for function “End data transfer” and confirm entry with [Q] button.

– Switch off ignition.

– Adjust accelerator position sender -G79- ⇒ page 136 .

Display does not change or is erratic:

– Check accelerator position sender -G79- as follows:

– Press the [→] button.

– Press buttons [0] and [6] for function “End data transfer” and confirm entry with [Q] button.

– Switch off ignition.

– Remove cover in footwell (driver side).

– Disconnect 6-pin connector for accelerator position sender -G79- .

– Measure resistance of sender between contacts 1+3 of connector. Specification: accelerator pedal in idling position: 0.8…1.4 kΩ

– Measure the sender resistance between contacts 2+3 of the connector. Specification: accelerator pedal in idling position: 0.8…1.4 kΩ

– Check idling speed switch -F60- in accelerator position sender -G79- : To do this, measure resistance between connector contacts 4+6. Specification: accelerator pedal in idling position: max. 0.8…1.2 kΩ, accelerator pedal depressed: ∞ Ω

– Measure resistance of sender between contacts 5+6 of connector. Specification: accelerator pedal in idling position: ∞ Ω accelerator pedal depressed: 0.8…1.2 kΩ

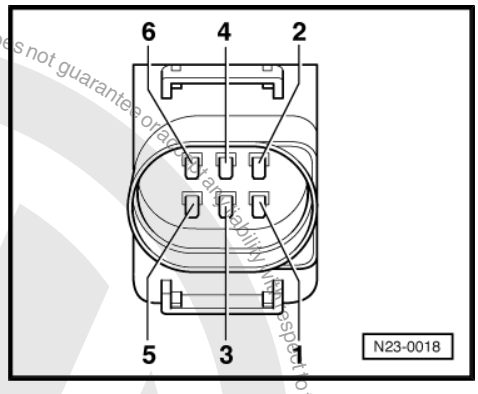

If the specifications are not attained:

– Renew accelerator position sender -G79- ⇒ Item 2 (page 132)

– Read fault memory ⇒ page 7 .

If the specifications are attained:

Protected by copyright. Copying for private or commercial purposes, in part or in whole, is not permitted unless authorised by Volkswagen AG. Volkswagen AG does not guarantee or assume any liability with respect to the correctness of information in this document. Copyright by Volkswagen AG.
satelettronica

Protected by copyright. Copyright by Volkswagen AG. Volkswagen AG does not guarantee the correctness of information in this document. Copyright by Volkswagen AG. Unauthorised copies, in whole or in part, are not permitted unless authorised by Volkswagen AG.

– Connect adapter cable, 121-pin -V.A.G 1598/31- to control unit wiring harness. The engine control unit remains disconnected.

– Remove cover in footwell (driver side).

– Disconnect 6-pin connector for accelerator position sender -G79- .

– Check wiring between adapter cable, 121-pin -V.A.G 1598/31- and connector for open circuit referring to current flow diagram.

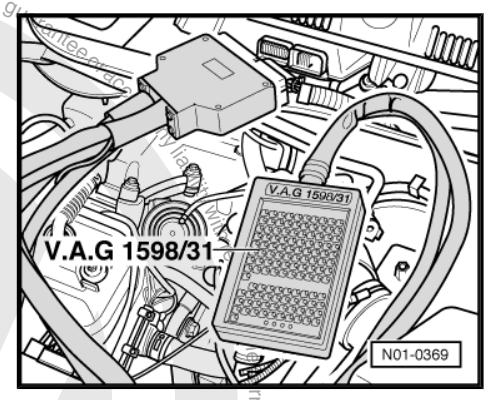

Contact 1 + socket 69

Contact 2 + socket 12

Contact 3 + socket 50

Contact 4 + socket 70

Contact 5 + socket 63

Contact 6 + socket 51

Wire resistance: max. 1.5 Ω.

– Also check wiring for short to one another, short to vehicle earth and short to battery positive. Specification: ∞ Ω.

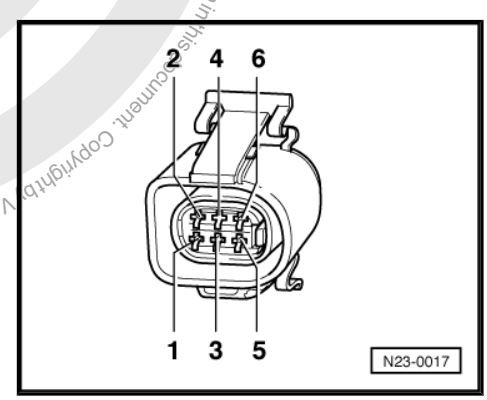

If no fault in lines is detected:

– Renew diesel direct injection system control unit -J248- ⇒ page 191 .

1.8.2 Left-hand drive vehicles

Test procedure

– Connect fault reader -V.A.G 1551- or vehicle diagnosis, testing and information system -VAS 5051B- and select engine electronics control unit with “address word 01”. The ignition must be switched on for this purpose.

Indicated on display:

```
Rapid data transfer                HELP
Select function XX
```

– Press buttons 0 and 8 for function “Read measured value block” and confirm entry with Q button.

Indicated on display:

```
Read measured value block          HELP
Input display group number XXX
```

– Press buttons 0, 0 and 2 for “display group number 2” and confirm entry with Q button.

– Check accelerator position display in display zone 2. The accelerator pedal must not be depressed. Specification: 0.0 %

```
Read measured value block 2          ->
0 rpm   0.0 %   0 1 0          18.4 °C
```

– In addition check the idling speed switch display in display zone 3. The middle position must show 1. Display: 0 1 0

– Depress accelerator pedal slowly until fully down, and observe display zones 2 and 3.

```
Read measured value block 2          ->
0 rpm   100.0 %   0 0 0        18.4 °C
```

♦ Display zone 2: The accelerator pedal position value must increase continuously. Specification at full throttle position: 100 %

satelettronica

- ♦ Display zone 3: The middle position must change to 0. Display: 0 0 0
- – Press the [→] button.
- – Press buttons [0] and [6] for function “End data transfer” and confirm entry with [Q] button.
- – Switch off ignition.

End specification value not achieved:

- – Renew accelerator position sender -G79- ⇒ Item 3 (page 131)
- – Read fault memory ⇒ page 7 .

Display does not change or is erratic:

- – Check accelerator position sender -G79- wiring as follows:
- – Connect adapter cable, 121-pin -V.A.G 1598/31- to control unit wiring harness. The engine control unit remains disconnected.
- – Remove cover in footwell (driver side).
- – Disconnect 6-pin connector for accelerator position sender -G79- .
- – Check wiring between adapter cable, 121-pin -V.A.G 1598/31- and connector for open circuit referring to current flow diagram.

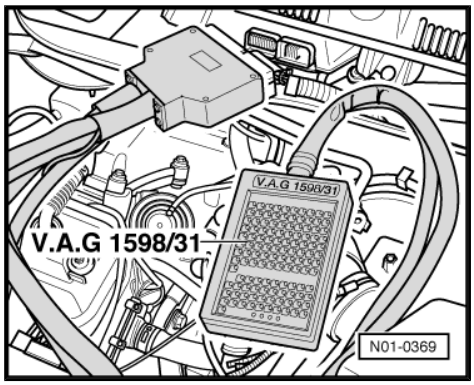

Contact 1 + socket 63

Contact 2 + socket 12

Contact 3 + socket 50

Contact 4 + socket 69

Contact 5 + socket 70

Contact 6 + socket 51

Wire resistance: max. 1.5 Ω.

- – Also check wiring for short to one another, short to vehicle earth and short to battery positive. Specification: ∞ Ω.

If no fault in lines is detected:

- – Renew accelerator position sender -G79- ⇒ Item 3 (page 131)
- – Read fault memory ⇒ page 7 .

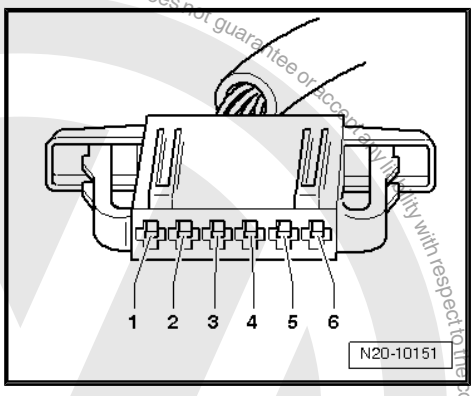

1.9 Adjusting accelerator position sender -G79-

Right-hand drive vehicles only

Procedure

Adjusting cable cam:

satelettronica
Protected by copyright. Copying for private or commercial purposes, in part or in whole, is not permitted unless authorised by Volkswagen AG. Volkswagen AG does not guarantee or accept any liability with respect to the correctness of information in this document. Copyright by Volkswagen AG.

– Fit cable cam in position shown.

– Then secure accelerator position sender -G79- with preassembled cable cam to mounting bracket.

– Reconnect sender 6-pin connector.

Fine adjustment with sender installed:

– Depress accelerator pedal by hand until accelerator pedal lies against accelerator pedal stop.

– If the accelerator pedal stop is not attained: Turn sender in elongated holes of mounting bracket.

– After adjusting, check accelerator position sender -G79- using fault reader -V.A.G 1551- or vehicle diagnosis, testing and information system -VAS 5051B- ⇒ page 133 .

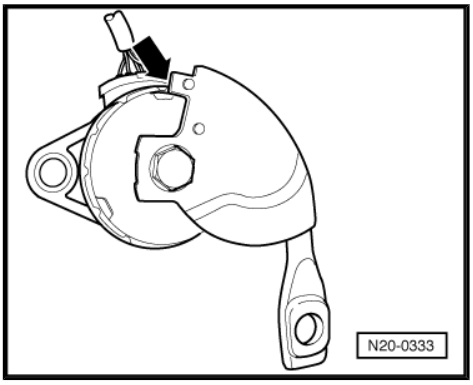

1.10 Checking tandem pump

DANGER!

The tandem pump may, under no circumstances, be dismantled as the vacuum part could otherwise malfunction.

This would result in the failure of the brake servo.

Special tools and workshop equipment required

♦ Tandem pump tester -VAS 5187-

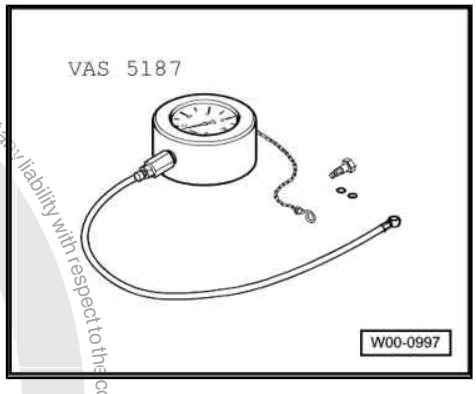

♦ Torque wrench -V.A.G 1331-

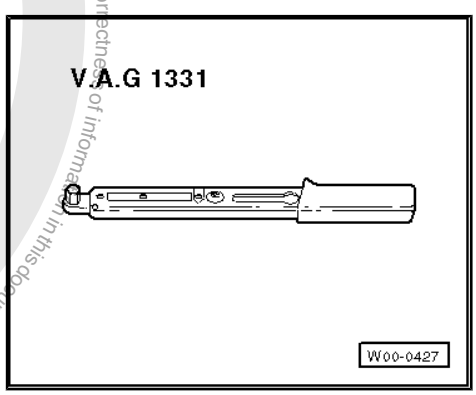

♦ Fault reader -V.A.G 1551- or vehicle diagnosis, testing and information system -VAS 5051B-

Test prerequisites

- Coolant temperature must be at least 85 °C.
- Unit injectors OK.

Volkswagen AG does not guarantee or accept any liability with respect to the correctness of information in this document. Copyright by Volkswagen AG. Page - copy copyright. Copying for private or commercial purposes, in part or in whole, is not permitted unless authorised by Volkswagen AG.

satelettronica

- Fuel filter and fuel lines must not be blocked.
- The non-return valve in the fuel supply hose must be OK.

Procedure

– Remove screw plug -arrow-.

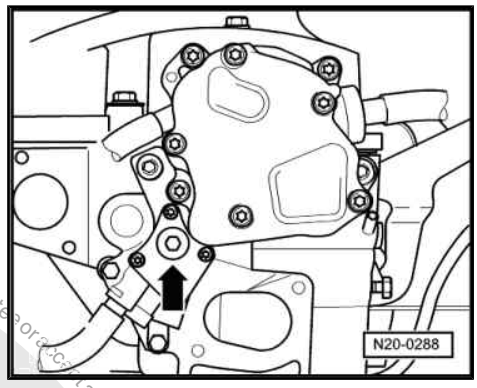

– Connect tandem pump tester -VAS 5187- as shown.

– Connect fault reader -V.A.G 1551- or vehicle diagnosis, testing and information system -VAS 5051B- and select engine electronics control unit with “address word 01”. Engine must be idling.

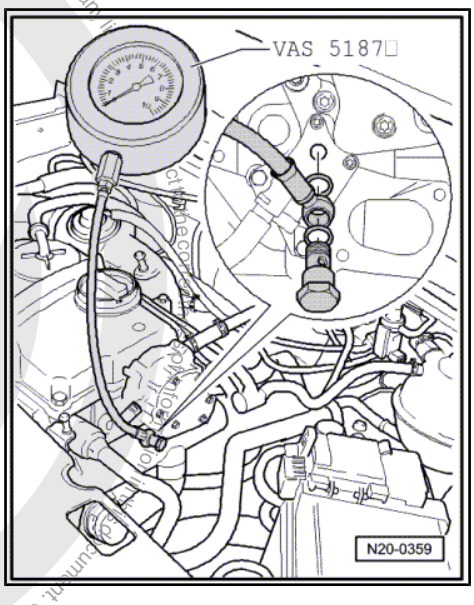

Indicated on display:

```
Rapid data transfer                HELP
Select function XX
```

– Press buttons 0 and 8 for function “Read measured value block” and confirm entry with Q button.

Indicated on display:

```
Read measured value block          HELP
Input display group number XXX
```

– Press buttons 0, 0 and 2 for “display group number 2” and confirm entry with Q button.

Indicated on display: (1...4 = display zones)

```
Read measured value block 2          ->
         1         2         3         4
```

– Read off engine idling speed in display zone 1.

– Increase engine speed to 1500 rpm.

– Observe pressure on pressure gauge. Specification: min. 3.5 bar.

If the specification is not attained:

– Renew tandem pump ⇒ page 139 .

Note

After removing tandem pump tester -VAS 5187- tighten plug to 25 Nm. Always renew seal.

Copyright by Volkswagen AG. Volkswagen AG does not guarantee or assume any liability with respect to the correctness of information in this document. Copyright by Volkswagen AG. Reproduced unless authorised by Volkswagen AG.
satelettronica

1.11 Removing and installing tandem pump

DANGER!

The tandem pump may, under no circumstances, be dismantled as the vacuum part could otherwise malfunction.

This would result in the failure of the brake servo.

Special tools and workshop equipment required

- Torque wrench -V.A.G 1331-
- Hand vacuum pump -V.A.G 1390-
- Water drainage container -V.A.G 1390/1-
- Spring-type clip pliers -VAS 5024A-

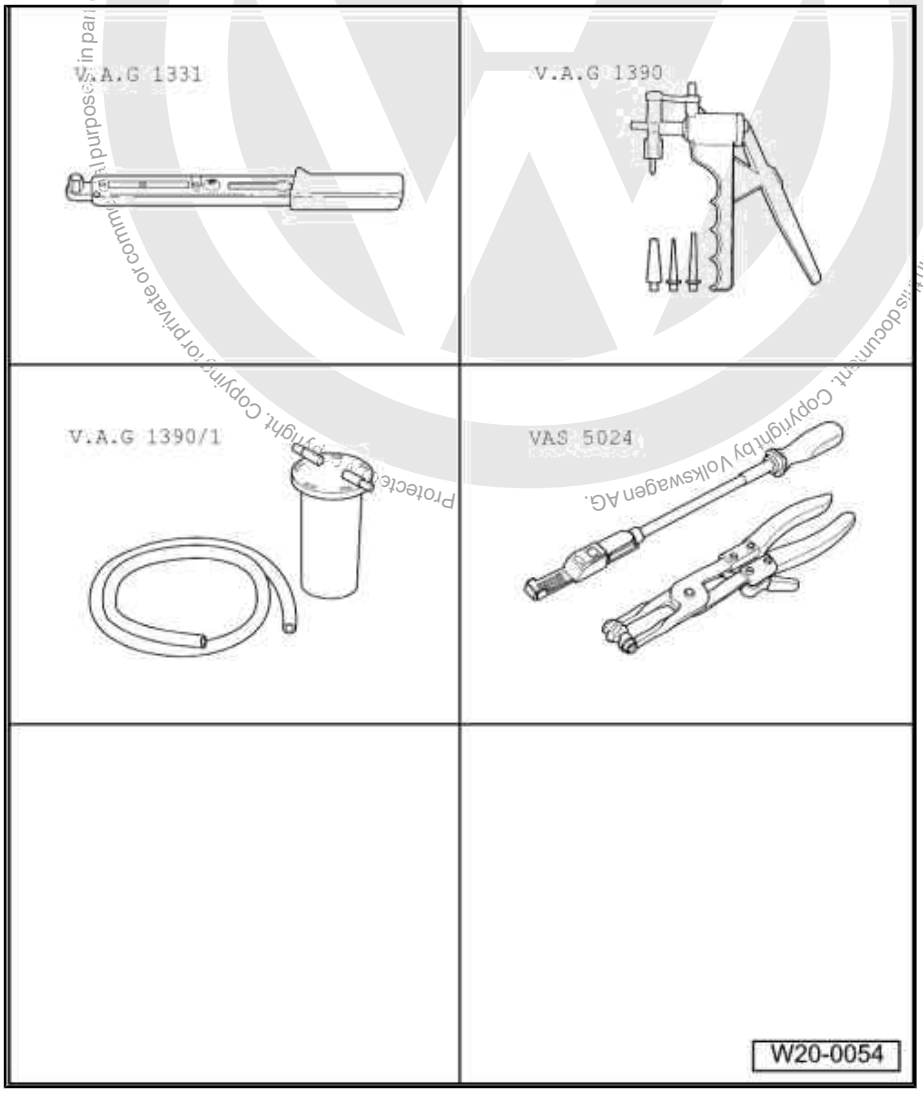

satelettronica

Removing

– Pull off supply hose -1- (white marking) and return hose -2- (blue marking) from fuel filter.

– Connect hand vacuum pump -V.A.G 1390- with water drainage container -V.A.G 1390/1- to return hose.

– Operate hand vacuum pump -V.A.G 1390- until no more fuel comes out of return hose. Be careful that no fuel is sucked into hand vacuum pump -V.A.G 1390- .

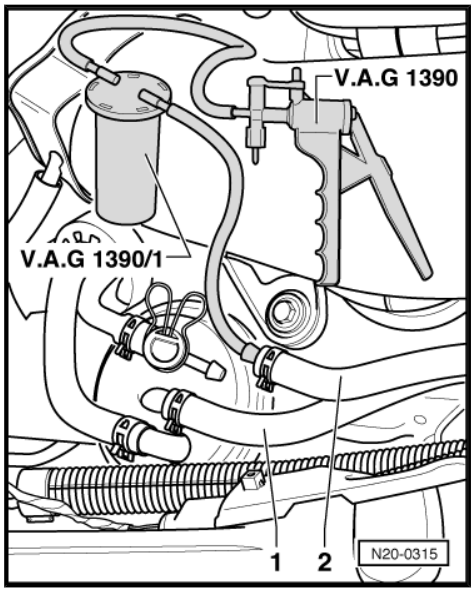

– Pull vacuum line -1- from brake servo off tandem pump -4-.

– Pull off central connector for unit injectors.

– Pull supply hose -2- (white marking) off tandem pump -4-.

– Remove securing bolts -arrows-.

– Remove tandem pump -4- from cylinder head.

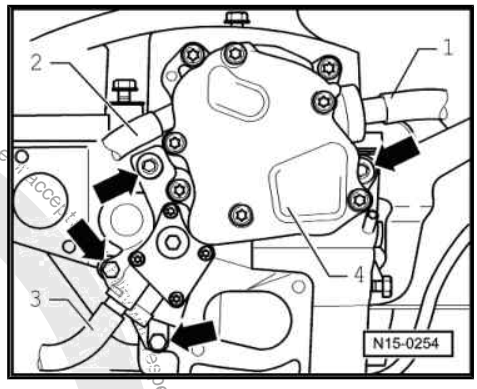

– Pull tandem pump -4- slightly upwards, pull off return hose -3- (blue marking) and remove tandem pump -4-.

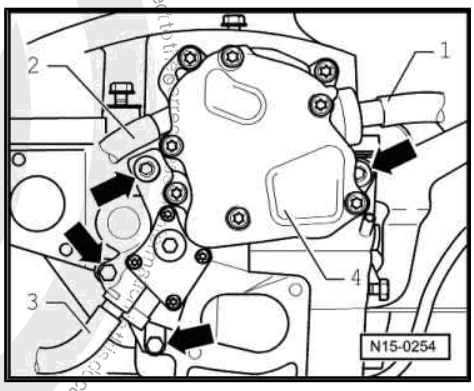

Installing

Installation is carried out in the reverse order. When installing, note the following:

Note

♦ *Ensure that tandem pump coupling seats properly in camshaft.*

♦ *Always replace tandem pump seals.*

– Connect return hose -3- (blue marking) to return connection of tandem pump.

– Install tandem pump and tighten top securing bolts to 20 Nm.

– Tighten lower securing bolts to 10 Nm.

– Connect supply hose -2- (white marking) to supply connection and vacuum line -1- from brake servo to tandem pump -4-.

– Connect central connector for unit injector connectors.

satelettronica

– Attach supply hose -1- (white marking) to fuel filter.
– Connect hand vacuum pump -V.A.G 1390- and water drainage container -V.A.G 1390/1- to return hose -2- (blue marking) of fuel filter.
– Operate hand vacuum pump -V.A.G 1390- until fuel comes out of return hose. Be careful that no fuel is sucked into hand vacuum pump -V.A.G 1390- .
– Attach return hose -2- (blue marking) to fuel filter.
– Read fault memory ⇒ page 7 .

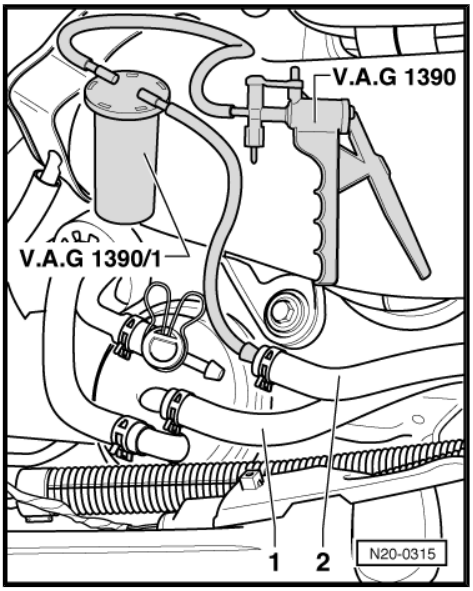

Note

Disconnecting the central connector for unit injectors causes faults to be stored. Therefore read and erase fault memory.

satelettronica

Protected by copyright. Copying for private or commercial purposes, in part or in whole, is not permitted unless authorised by Volkswagen AG. Volkswagen AG does not guarantee or accept any liability with respect to the correctness of information in this document. Copyright by Volkswagen AG.

21 – Turbocharging/supercharging

1 Charge air system with turbocharger

1.1 Safety precautions

Caution

When doing any repair work, especially in the engine compartment, pay attention to the following due to the cramped conditions:

- *Route all the various lines (e.g. for fuel, hydraulics, activated charcoal filter system, coolant, refrigerant, brake fluid and vacuum) and electrical wiring in their original positions.*
- *Ensure that there is sufficient clearance to all moving or hot components.*

Observe following if test and measuring instruments are required during a road test:

- Test and measuring instruments must be secured to rear seat and operated by a second person from this location.

If test and measuring instruments are operated from front passenger seat and the vehicle is involved in an accident, there is a possibility that the person sitting in this seat may receive serious injuries when the airbag is triggered.

1.2 Rules for cleanliness

When working on the turbocharger, pay careful attention to the following rules of cleanliness:

- Thoroughly clean all unions and adjacent areas before disconnecting.
- Place removed parts on a clean surface and cover. Do not use fluffy cloths!
- Carefully cover opened components or seal if repairs cannot be carried out immediately.
- Install clean components only. Do not remove replacement parts from packing until immediately before installing. Do not use parts that have not been stored in their packing (e.g. in tool boxes etc.).
- Existing transport and protective packaging and sealing caps must only be removed immediately prior to installation.
- When making repairs, remove oil from connection and hose ends.
- When system is open: do not work with compressed air if this can be avoided. Do not move vehicle unless absolutely necessary.

1.3 Removing and installing turbocharger with attachments

Observe safety precautions ⇒ page 142 .

Observe rules for cleanliness ⇒ page 142 .

Protected by copyright. Copying, distribution and passing on to third parties is not permitted unless authorised by Volkswagen AG. Volkswagen AG does not guarantee or accept any liability with respect to the correctness of information in this document. Copyright by Volkswagen AG.

satelettronica

Note

- *All hose connections are secured with clamps and/or securing clips.*
- *Spring-type clip pliers -VAS 5024A- are recommended for installation of spring-type clips.*
- *Do not install hose connections with lubricant containing oil.*
- *Charge air system must be free of leaks.*
- *Before screwing on oil supply line, fill turbocharger at connection with engine oil.*
- *After installing turbocharger run engine for approx. 1 minute at idling speed, do not rev engine. This ensures that the turbocharger/compressor is adequately lubricated.*
- *Renew self-locking nuts.*

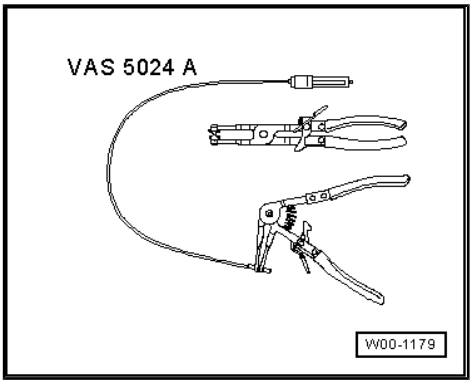

1.3.1 Hose connections with push-on connectors

Note

All charge air system hose connections are secured by spring-type clips or by push-on connectors. Always check the following points with push-on connectors:

– Release push-on connection by pulling locking clip -arrow-. Separate hose and pipe without tools.

– When installing, ensure that locking lugs -A- engage securely.

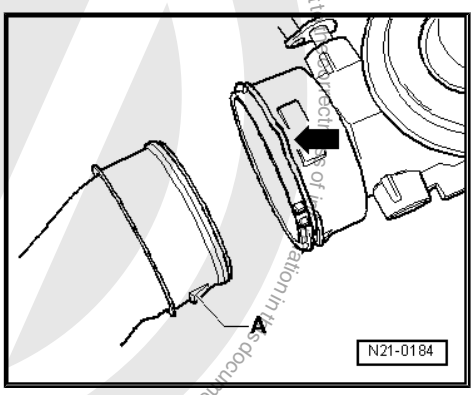

1.3.2 Assembly overview

Protected by copyright. Copying for private or commercial purposes, in part or in whole, is not permitted unless authorised by Volkswagen AG. Volkswagen AG does not guarantee or accept any liability with respect to the correctness of information in this document. Copyright by Volkswagen AG.
satelettronica

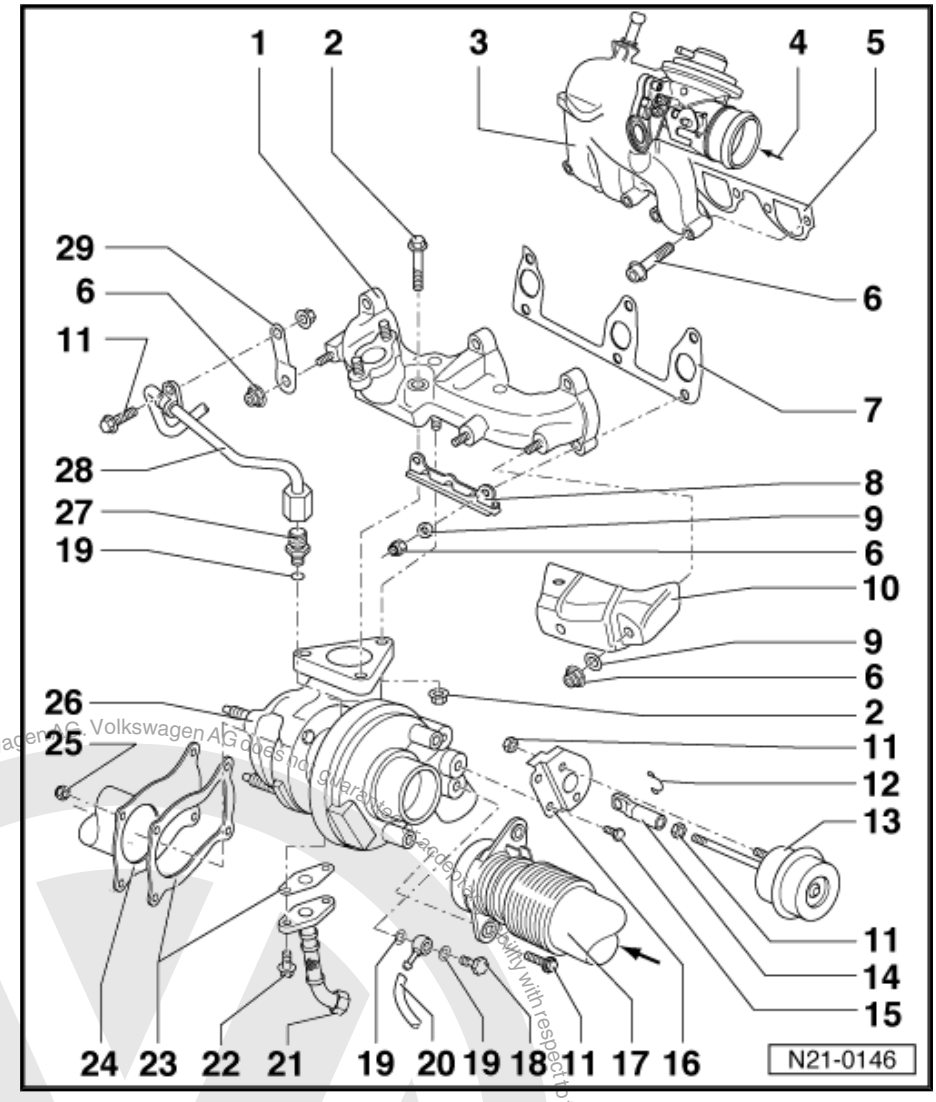

1 - Exhaust manifold

2 - 30 Nm
- ❑ Renew
- ❑ Coat threads and bolt head seating surface with grease -G 000 500- .

3 - Intake manifold

4 - From charge air cooler

5 - Seal
- ❑ Renew
- ❑ Coating (beading) towards intake manifold

6 - 25 Nm

7 - Seal
- ❑ Note installation position.

8 - Bracket
- ❑ For heat shield ⇒ Item 10 (page 144) .

9 - Washer

10 - Heat shield
- ❑ Engage in bracket ⇒ Item 8 (page 144) .

11 - 10 Nm

12 - Circlip

13 - Vacuum unit
- ❑ For charge pressure control valve
- ❑ Checking ⇒ page 152
- ❑ Removing and installing ⇒ page 153 .

14 - Operating rod

15 - 10 Nm
- ❑ Insert with locking fluid -D 000 600 A2- .

16 - Bracket

17 - From air filter.

18 - Banjo bolt, 15 Nm

19 - Seal
- ❑ Renew

20 - Hose
- ❑ To charge pressure control solenoid valve -N75- ⇒ page 147 .

21 - Oil return line, 30 Nm
- ❑ To cylinder block

22 - 15 Nm

23 - Seal
- ❑ Renew

Protected by copyright. Copyright by Volkswagen AG. Copying for private or commercial purposes, in part or in whole is not permitted unless authorised by Volkswagen AG. Volkswagen AG does not guarantee or accept any liability with respect to the correctness of information in this document.
satelettronica

24 - Front exhaust pipe

25 - 25 Nm

- ❑ Renew

26 - Turbocharger

- ❑ To remove: remove connecting pipe between turbocharger and air mass meter, connecting pipe between intake manifold and charge air cooler and cover for right drive shaft
- ❑ Checking charge pressure control ⇒ page 148 .

27 - Union, 30 Nm

- ❑ Renew
- ❑ Coat threads and bolt head contact surface with high-temperature paste -G 052 112 A3- .
- ❑ Fill connection with engine oil before attaching oil supply line.

28 - Oil supply line

- ❑ From oil filter bracket ⇒ Item 6 (page 107)
- ❑ Before installing oil supply line, ensure that it is not blocked.
- ❑ Before installing, fill turbocharger with engine oil through oil supply line connection.
- ❑ Removing and installing ⇒ page 108 .

29 - Bracket

1.4 Removing and installing parts of charge air cooling

Note

- *All hose connections are secured by clips.*
- *For assembly use lubricant (water without additive) if necessary. Do not use lubricants containing oil.*
- *When making repairs, remove oil from connection and hose ends.*
- *Charge air system must be free of leaks.*

Protected by copyright. Copyright for private or commercial purposes, in part or in whole, is not permitted unless authorised by Volkswagen AG. Volkswagen AG does not guarantee or accept any liability with respect to the correctness of information in this document. Copyright by Volkswagen AG.

satelettronica

1.4.1 Assembly overview

1 - Charge air cooler

2 - Connecting hose

3 - 10 Nm

4 - Bracket
- ❑ For connecting pipe
- ❑ Bolted to sump

5 - Connecting pipe

6 - Connecting hose
- ❑ Connecting pipe/turbo-charger

7 - Connecting hose
- ❑ Connecting pipe/intake connection

8 - Intake manifold temperature sender -G72-

9 - 3 Nm

10 - O-ring
- ❑ Renew if damaged.

11 - Connection

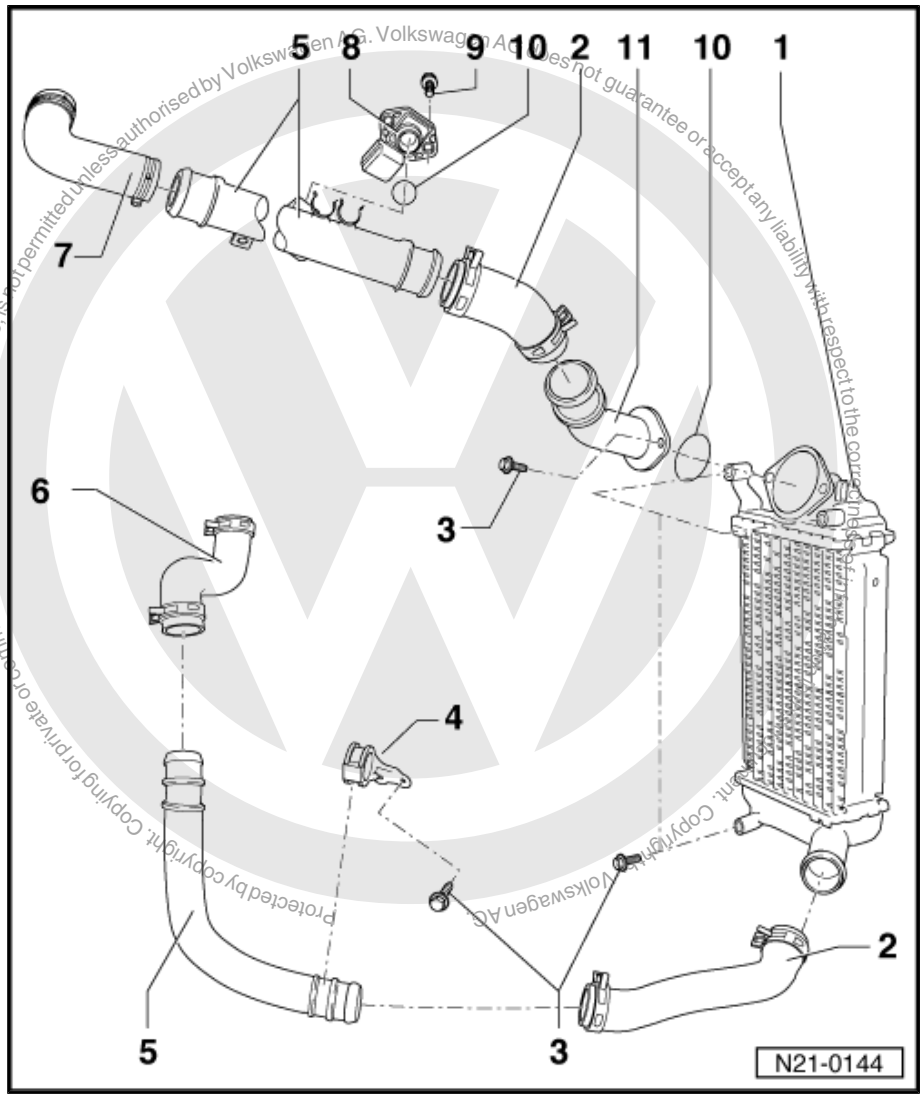

Protected by copyright. Copying for private or commercial purposes, part or in whole, is not permitted unless authorised by Volkswagen AG. Volkswagen AG does not guarantee or accept any liability with respect to the correctness of information. Copyright by Volkswagen AG.

satelettronica

1.5 Charge pressure control hose routing diagram

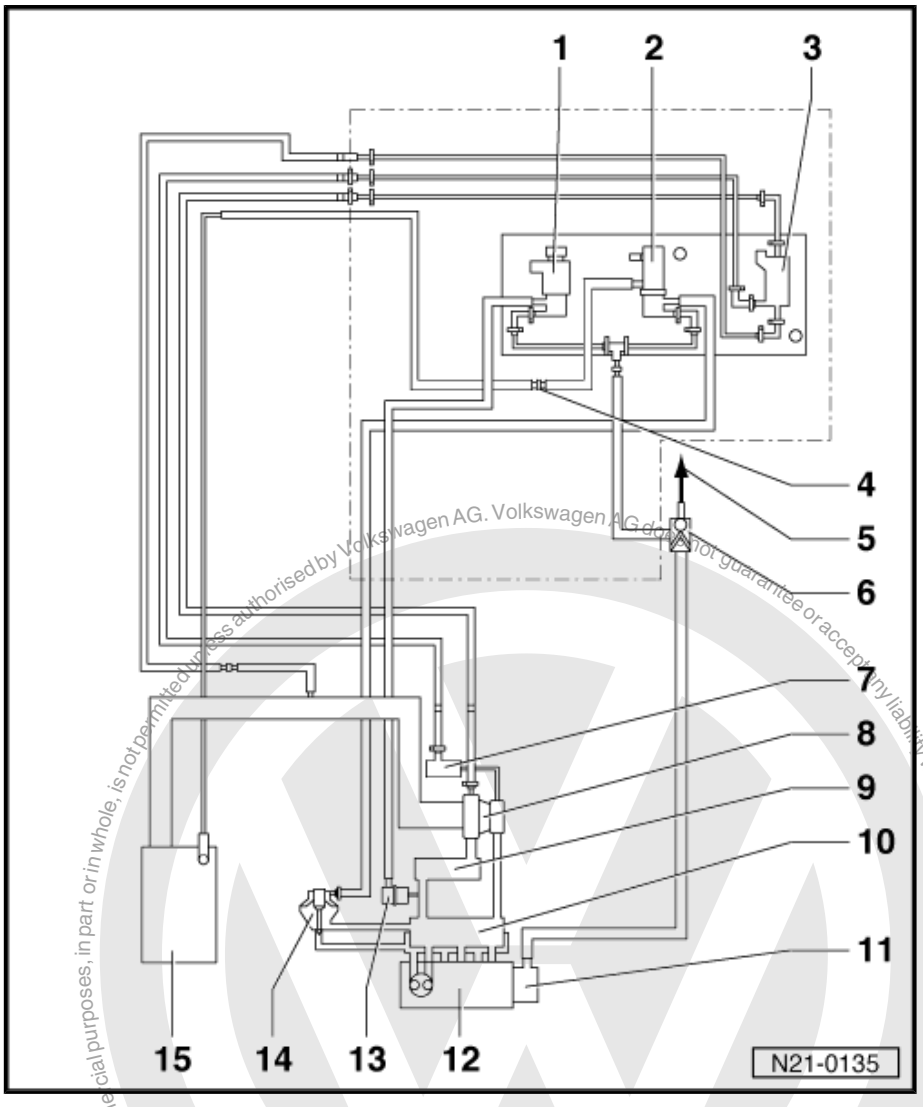

1 - Variable intake manifold flap change-over valve -N239-

2 - Exhaust gas recirculation valve -N18-

3 - Charge pressure control solenoid valve -N75-

- ❑ Checking charge pressure control ⇒ page 148 .

4 - Connector

5 - To brake servo.

6 - Non-return valve

7 - Vacuum unit

- ❑ For charge pressure control.

8 - Turbocharger

9 - Charge air cooler

10 - Intake manifold

11 - Tandem pump

- ❑ For fuel and vacuum supply.
- ❑ Must not be taken apart

12 - Cylinder head

13 - Vacuum unit for intake manifold change-over

14 - Exhaust gas recirculation valve

- ❑ Component of the intake connecting pipe
- ❑ Can only be renewed together with intake connecting pipe

15 - Air mass meter -G70-

Protected by copyright. Copying for private or commercial purposes, in part or in whole, is not permitted unless authorised by Volkswagen AG. Volkswagen AG does not guarantee or accept any liability with respect to the correctness of information in this document. Copyright by Volkswagen AG.
satelettronica

2 Checking charge pressure system

2.1 Checking charge pressure control

Special tools and workshop equipment required

- Hand vacuum pump -V.A.G 1390-
- Hand multimeter -V.A.G 1526A- or hand multimeter -V.A.G 1526C-
- Auxiliary measuring set - V.A.G 1594A- or auxiliary measuring set -V.A.G 1594C-
- Adapter cable, 121-pin - V.A.G 1598/31-
- Fault reader -V.A.G 1551-
- Diagnosis lead -V.A.G 1551/3C-
- Current flow diagram

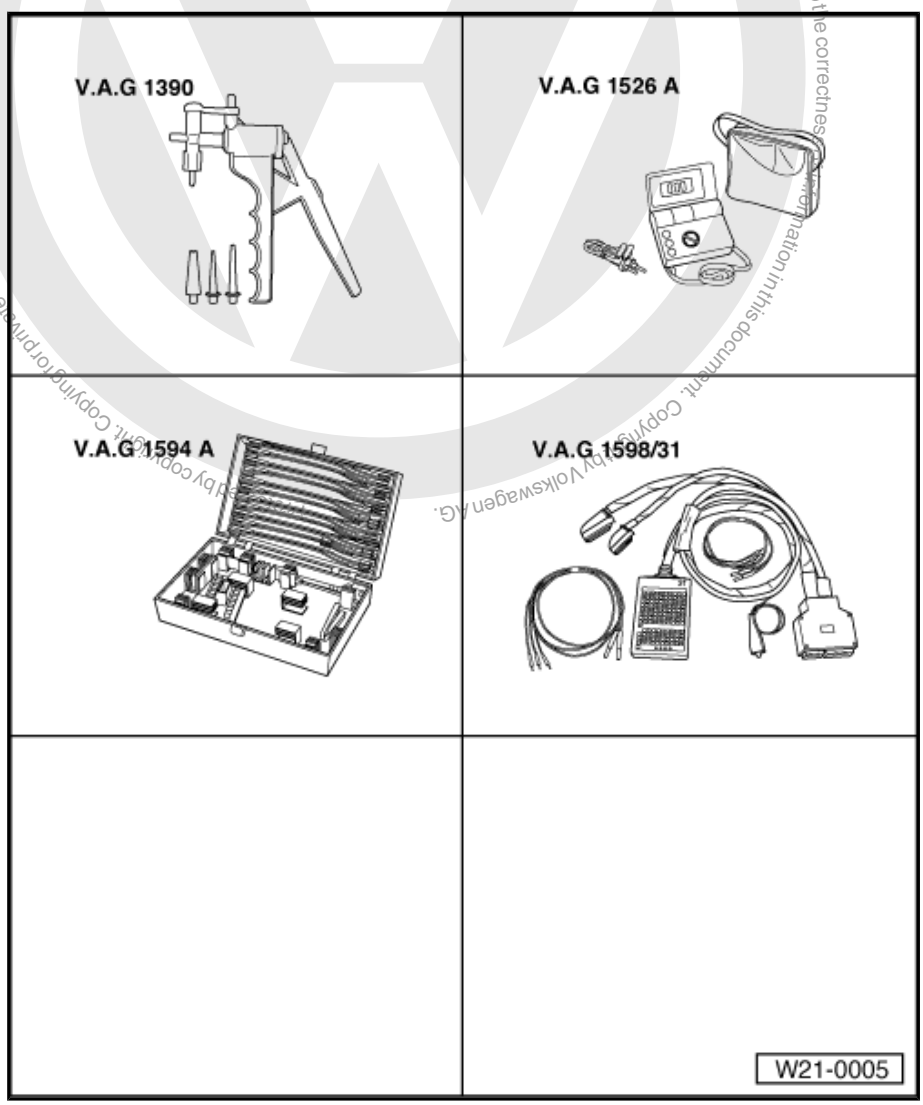

Test prerequisites

- No fault stored in fault memory ⇒ page 7 .
- No leaks on intake and exhaust systems
- Control wire to charge pressure control valve is not blocked, loose or leaking.
- No faults in engine and fuel injection system.
- Engine oil temperature at least 80 °C

Test procedure

Observe following if test and measuring instruments are required during a road test:

- Test and measuring instruments must be secured to rear seat and operated by a second person from this location.

Copyright by Volkswagen AG. Volkswagen AG does not guarantee or accept any liability with respect to the correctness of information in this document. Copying for private or commercial purposes, in part or in whole, is not permitted unless authorised by Volkswagen AG.
satelettronica

If test and measuring instruments are operated from front passenger seat and the vehicle is involved in an accident, there is a possibility that the person sitting in this seat may receive serious injuries when the airbag is triggered.

– The charge pressure is measured with fault reader -V.A.G 1551- during a road test.

To check the function of charge pressure control, it is necessary to first determine the charge pressure without charge pressure control.

Protected by copyright. Copying for private or commercial purposes, in part or in whole, is not permitted unless authorised by Volkswagen AG. Volkswagen AG doesn't guarantee or accept any liability with respect to the correctness of information in this document. Copyright by Volkswagen AG.

satelettronica

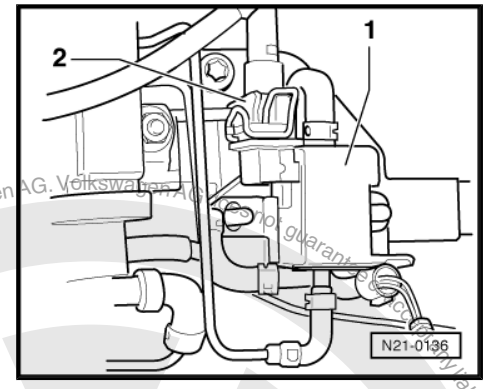

– Pull connector -2- off charge pressure control solenoid valve -N75- -1-.

– Connect fault reader -V.A.G 1551- and select engine electronics control unit with “address word 01”. Engine must be idling.

Indicated on display:

```
Rapid data transfer                    HELP
Select function XX
```

– Press buttons 0 and 8 for function “Read measured value block” and confirm entry with Q button.

Indicated on display:

```
Read measured value block              HELP
Input display group number XXX
```

– Press buttons 0, 1 and 1 for “display group number 11” and confirm entry with Q button.

– Indicated on display:

```
Read measured value block 11            ->
840 rpm   938 mbar  978 mbar          92 %
```

– Accelerate vehicle in 3rd gear from approx. 1500 rpm using full throttle.

– At approx. 3000 rpm, press PRINT button.

Specification in display zone 3: 1375…1625 mbar

```
Read measured value block 11            ->
3090 rpm   1866 mbar  1550 mbar       62 %
```

If the charge pressure is not attained:

– Check vacuum unit for charge pressure control valve, renew if necessary.

– Check vacuum hoses ⇒ page 147 .

– Repeat charge pressure test.

If the charge pressure has still not been attained:

– Renew turbocharger.

If the charge pressure is exceeded:

– Check charge pressure control solenoid valve -N75- . (Hose from turbocharger via valve to vacuum unit not blocked when connector is pulled off).

– Check vacuum hoses ⇒ page 147 .

– Check vacuum unit for charge pressure control valve and operating rod, renew if necessary.

– Check charge pressure control valve shaft mounting in turbocharger for ease of movement. If corroded (seized), renew turbocharger.

– If measured charge pressure is OK, repeat charge pressure test with charge pressure control:

– Charge pressure control solenoid valve -N75- connector fitted.

Protected by copyright. Copying for private or commercial purposes, in part or in whole, is not permitted unless authorised by Volkswagen AG. Volkswagen AG does not guarantee or accept any liability with respect to the correctness of information in this document. Copyright by Volkswagen AG.
satelettronica

Protected by copyright. Copyright by Volkswagen AG. Volkswagen AG does not guarantee or accept any liability with respect to the correctness of information in this document. Copyright by Volkswagen AG. Copyright holder is not permitted unless authorised by Volkswagen AG. Volkswagen AG does not guarantee or accept any liability with respect to the correctness of information in this document. Copyright by Volkswagen AG.

satelettronica

Note

Faults are stored by separating the connector on charge pressure control solenoid valve -N75- . Therefore read and erase fault memory.

– Read fault memory ⇒ page 7 .

– Connect fault reader -V.A.G 1551- and select engine electronics control unit with “address word 01”. Engine must be idling.

Indicated on display:

```
Rapid data transfer                    HELP
Select function XX
```

– Press buttons 0 and 8 for function “Read measured value block” and confirm entry with Q button.

Indicated on display:

```
Read measured value block              HELP
Input display group number XXX
```

– Press buttons 0, 1 and 1 for “display group number 11” and confirm entry with Q button.

– Indicated on display:

```
Read measured value block 11            ->
840 rpm   938 mbar  978 mbar          92 %
```

– Accelerate vehicle in 3rd gear from approx. 1500 rpm using full throttle.

– At approx. 3000 rpm, press PRINT button.

Specification: 1800...2200 mbar (in display zone 3).

```
Read measured value block 11            ->
3090 rpm   1866 mbar  1917 mbar       62 %
```

If the specification is not attained:

– Check charge pressure control solenoid valve -N75- ⇒ page 151 .

– Check vacuum hoses ⇒ page 147 .

2.1.1 Checking charge pressure control solenoid valve -N75-

– Switch off ignition.

– Pull connector -2- off charge pressure control solenoid valve -N75- -1-.

– Measure resistance between valve contacts.

Specification: 25...45 Ω

If the specification is not attained:

– Renew charge pressure control solenoid valve -N75- .

If the specification is attained:

– Switch on ignition.

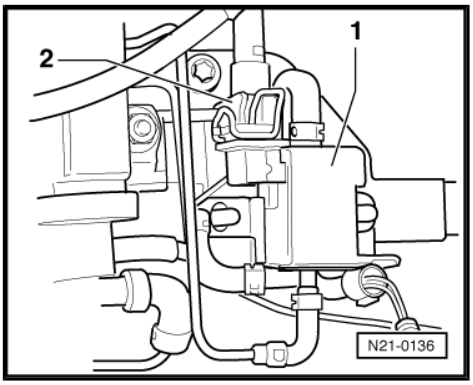

– Measure supply voltage at valve connector contact 1 and at engine earth. Specification: approx. battery voltage

If the specification is not attained:

– Switch off ignition.

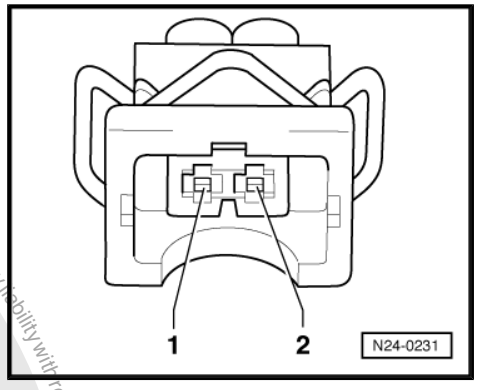

– Connect adapter cable, 121-pin -V.A.G 1598/31- to control unit wiring harness. The engine control unit remains disconnected.

– Check wiring between adapter cable, 121-pin -V.A.G 1598/31- and connector for open circuit referring to current flow diagram.

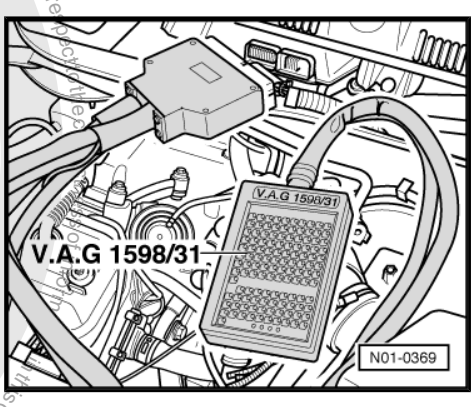

Contact 1 + socket 1 and 2

Contact 2 + socket 62

Wire resistance: max. 1.5 Ω.

– Also check wiring for short to one another, short to vehicle earth and short to battery positive.

Specification: ∞ Ω.

If no fault in lines is detected:

– Renew diesel direct injection system control unit -J248- ⇒ page 191 .

2.2 Checking charge pressure control valve vacuum unit

Test prerequisites

- Engine oil temperature at least 80 °C

Test procedure

– Pull connector -2- off charge pressure control solenoid valve -N75- -1-.

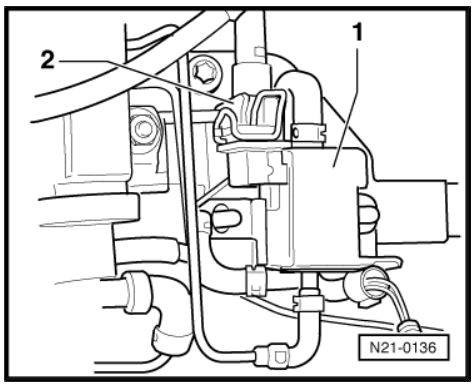

Protected by copyright. Copying for private or commercial purposes, in part or in whole, is not permitted unless authorised by Volkswagen AG. Volkswagen AG does not guarantee or accept any liability with respect to the correctness of information in this document. Copyright by Volkswagen AG.
satelettronica

– Start engine and increase to maximum rpm by flooring throttle. The charge pressure control valve operating rod -2- must move.

If the operating rod does not move:

– Check lever for charge pressure valve -1- for ease of movement. If corroded (seized), renew turbocharger.

If the operating rod does not move, even though the lever is free to move:

– Renew vacuum unit for charge pressure control valve -3-.

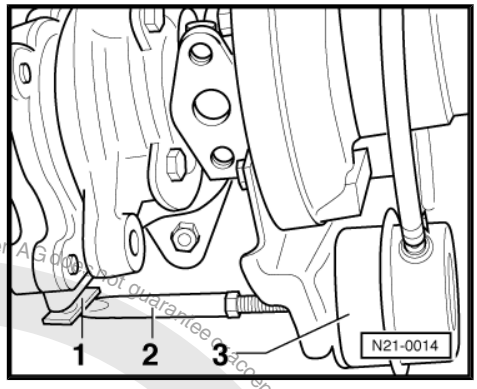

2.3 Removing and installing vacuum unit for charge pressure control valve

Special tools and workshop equipment required

♦ Torque wrench -V.A.G 1331-

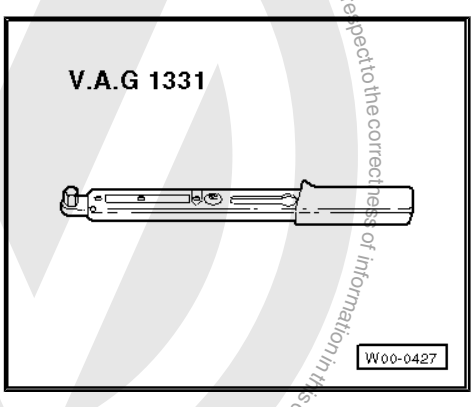

Removing

– Remove turbocharger.

– Unclip retainer -4-.

– Unscrew securing nuts -1-.

– Remove vacuum unit -6-.

Installing

– Fit vacuum unit -6- on turbocharger and tighten to 10 Nm.

– Loosen lock nut -2- of operating rod -3-.

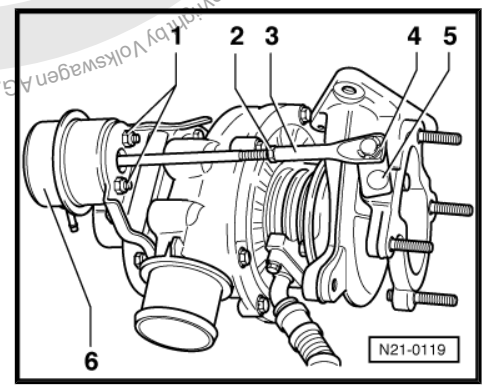

– Swing lever for charge pressure control valve -5- to vacuum unit onto stop and hold in place.

– Adjust length of operating rod -3- so that eye of rod can be placed easily over pin of lever -5-. (Lever on stop without play)

– From this position, screw in operating rod 8 turns. (Rod will be shortened)

– Tighten lock nut -2-.

– Fit operating rod on lever and engage retainer -4-.

– Install turbocharger.

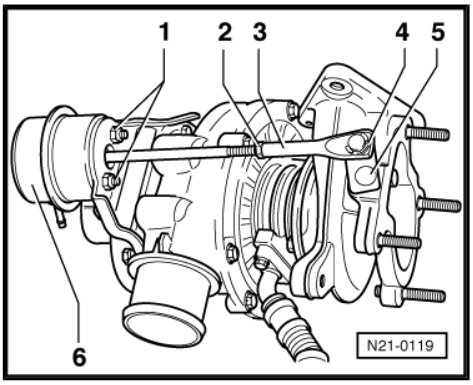

Protected by copyright. Copying for private or commercial purposes, in part or in whole, is not permitted unless authorised by Volkswagen AG. Volkswagen AG does not guarantee or accept any liability with respect to the correctness of information in this document. Copyright by Volkswagen AG.
satelettronica

23 – Mixture preparation - injection

1 Repairing diesel direct injection system

The diesel direct injection system control unit is equipped with a fault memory. Before starting repairs, adjustments and fault finding, the fault memory must be interrogated and final control diagnosis completed ⇒ page 7 .

Note

When performing test and adjustment work the control unit can recognize and store faults. For this reason after completing all check and adjustment operations it is necessary to erase fault memory ⇒ Page ⇒ page 8 .

1.1 Safety precautions

Observe following if test and measuring instruments are required during a road test:

- Test and measuring instruments must be secured to rear seat and operated by a second person from this location.

If test and measuring instruments are operated from front passenger seat and the vehicle is involved in an accident, there is a possibility that the person sitting in this seat may receive serious injuries when the airbag is triggered.

WARNING

Secure fault reader to rear seat and operate from this position.

To prevent injuries to persons and/or damage to the injection and glow plug system, the following must be noted:

- The ignition must be switched off before connecting or disconnecting injection or glow plug system wiring or tester cables.
- If the engine is to be turned at starter speed, without starting, e.g. when checking compressions, disconnect unit injector connector on cylinder head.
- Before disconnecting battery, obtain radio code for radios with anti-theft coding.
- Disconnecting and connecting the battery must only be undertaken when the ignition is switched off otherwise the diesel direct injection system control unit may be damaged.

1.2 Rules for cleanliness

When working on fuel supply and injection system, pay careful attention to the following rules for cleanliness:

- Thoroughly clean all unions and adjacent areas before disconnecting.
- Place removed parts on a clean surface and cover. Do not use fluffy cloths!
- Carefully cover opened components or seal if repairs cannot be carried out immediately.

Protected by copyright. Copyright by Volkswagen AG. Volkswagen AG does not guarantee or accept any liability with respect to the correctness of information in this document. Copyright by Volkswagen AG.
satelettronica

- Install clean components only. Do not remove replacement parts from packing until immediately before installing. Do not use parts that have not been stored in their packing (e.g. in tool boxes etc.).
- When system is open: do not work with compressed air if this can be avoided. Do not move vehicle unless absolutely necessary.
- Also ensure that no diesel fuel comes into contact with the coolant hoses. Should this occur, the hoses must be cleaned immediately. Damaged hoses must be renewed.

1.3 Fitting locations overview

Components A to D are not shown in the illustration.

A - Brake pedal switch -F47- (in footwell on brake pedal)

B - Brake light switch -F- (in footwell on brake pedal)

C - Accelerator position sender -G79- (in footwell on accelerator pedal)

D - Clutch pedal switch -F36- (in footwell on clutch pedal)

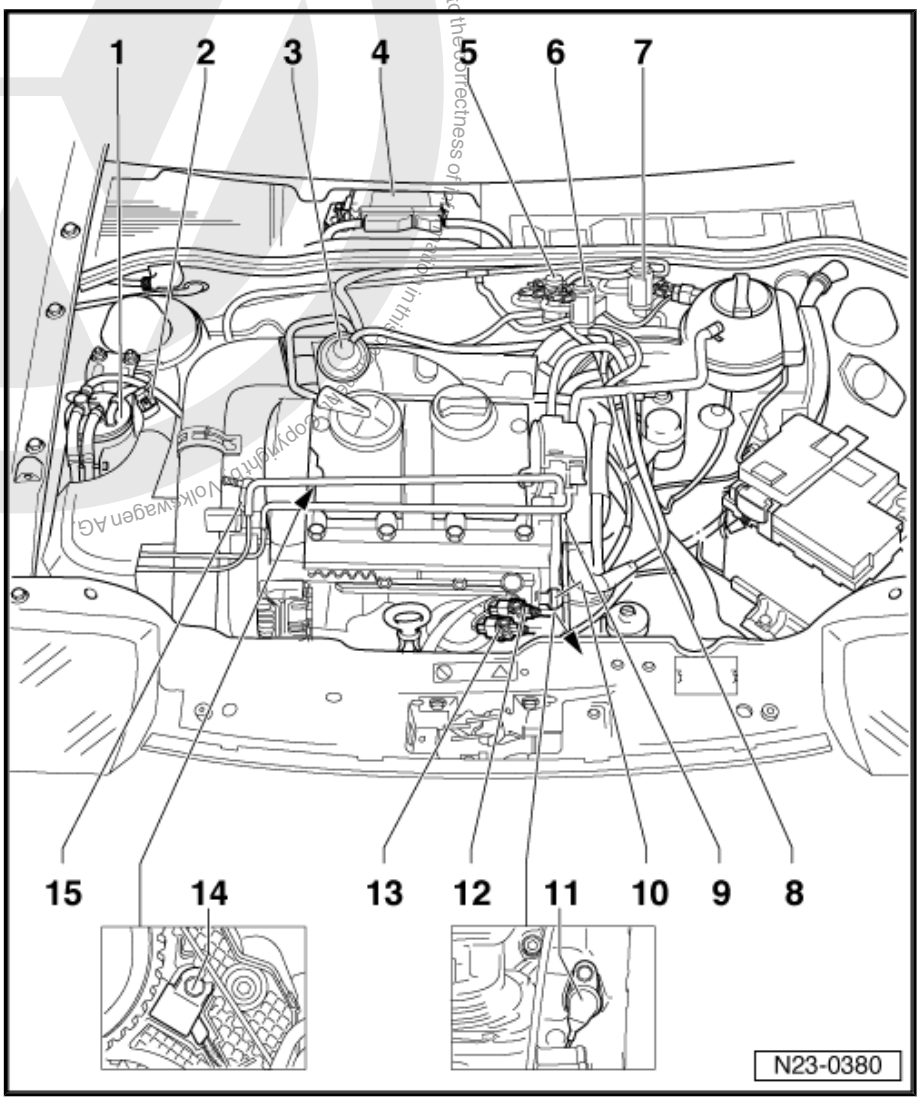

1 - Fuel filter

2 - Air mass meter -G70-

3 - Exhaust gas recirculation valve

- ❑ With intake manifold flap

4 - Diesel direct injection system control unit -J248-

- ❑ With altitude sender -F96- .
- ❑ Renewing ⇒ page 191 .

5 - Variable intake manifold flap change-over valve -N239-

6 - Exhaust gas recirculation valve -N18-

7 - Charge pressure control solenoid valve -N75-

8 - Coolant temperature sender -G62-

9 - Connector

- ❑ For:
- Unit injector solenoid valve, No. 1 cyl. -N240-
- Unit injector solenoid valve, No. 2 cyl. -N241-
- Unit injector solenoid valve, No. 3 cyl. -N242-

10 - Fuel temperature sender -G81-

11 - Engine speed sender -G28-

12 - Connector

- ❑ For Hall sender -G40- , for camshaft position

Protected by copyright. Copying for private or commercial purposes, in part or in whole, is not permitted unless authorised by Volkswagen AG. Volkswagen AG does not guarantee or accept any liability with respect to the correctness of the information in this document.
satelettronica

Protected by copyright. Copying for private or commercial purposes, in part or in whole, is not permitted unless authorised by Volkswagen AG. Volkswagen AG does not guarantee or accept any liability with respect to the correctness of information in this document. Copyright by Volkswagen AG.

13 - Connector

- ❑ For engine speed sender -G28-

14 - Hall sender -G40-

- ❑ For camshaft position

15 - Intake manifold pressure sender -G71- with intake manifold temperature sender -G72-

1.4 Repairing intake manifold flap

The intake manifold flap is closed for approx. 3 seconds when stopping engine and then opens again. This reduces the stop jolt.

Check intake manifold flap change-over ⇒ page 177

1 - Intake manifold

2 - O-ring

- ❑ Renew

3 - Exhaust gas recirculation valve

4 - Intake connecting pipe

- ❑ With exhaust gas recirculation valve and intake manifold flap.

5 - 10 Nm

6 - From charge air cooler

7 - Seal

- ❑ Renew

8 - Connecting pipe

- ❑ To exhaust manifold

9 - 25 Nm

10 - 10 Nm

11 - Bracket

12 - Vacuum actuator

13 - Variable intake manifold flap change-over valve

- ❑ Checking ⇒ page 177

14 - Vacuum supply

- ❑ From vacuum pump

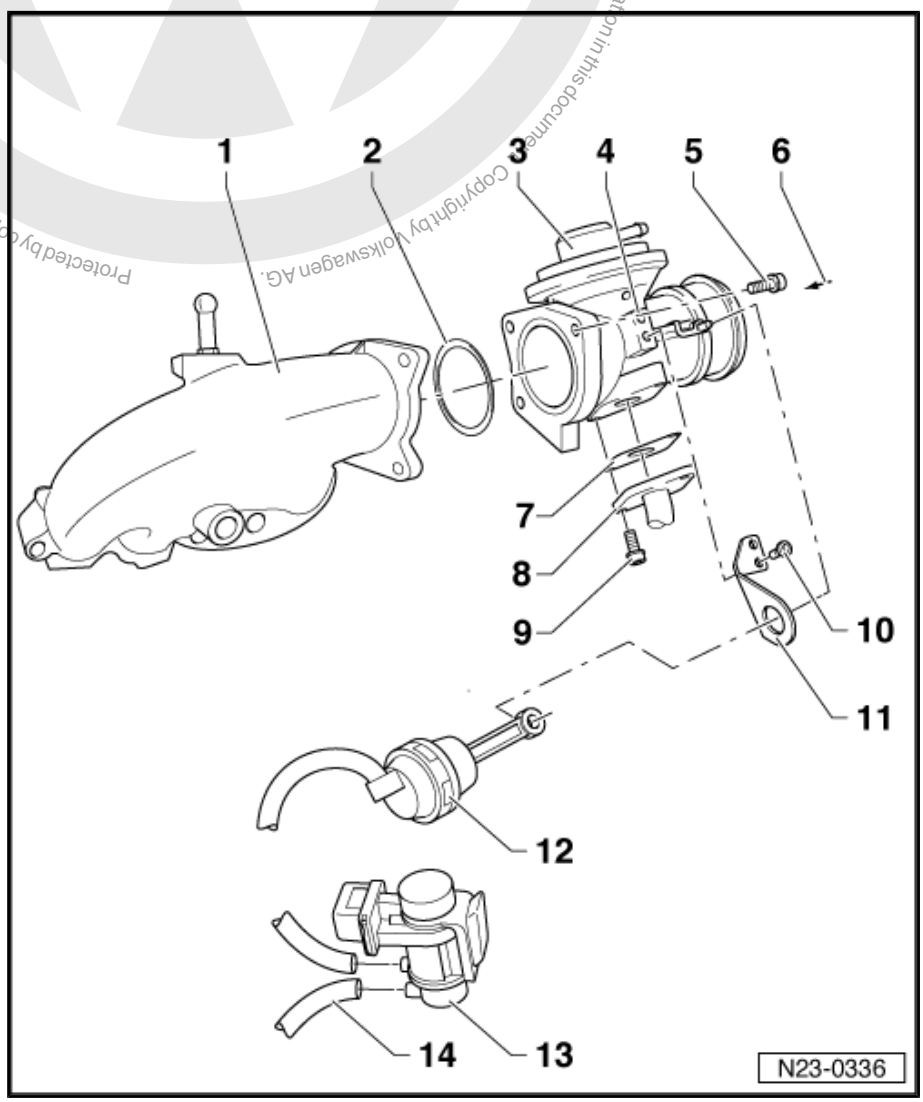

1.5 Servicing unit injector

- ♦ Observe rules for cleanliness ⇒ page 128
- ♦ Always renew seals and O-rings

satelettronica

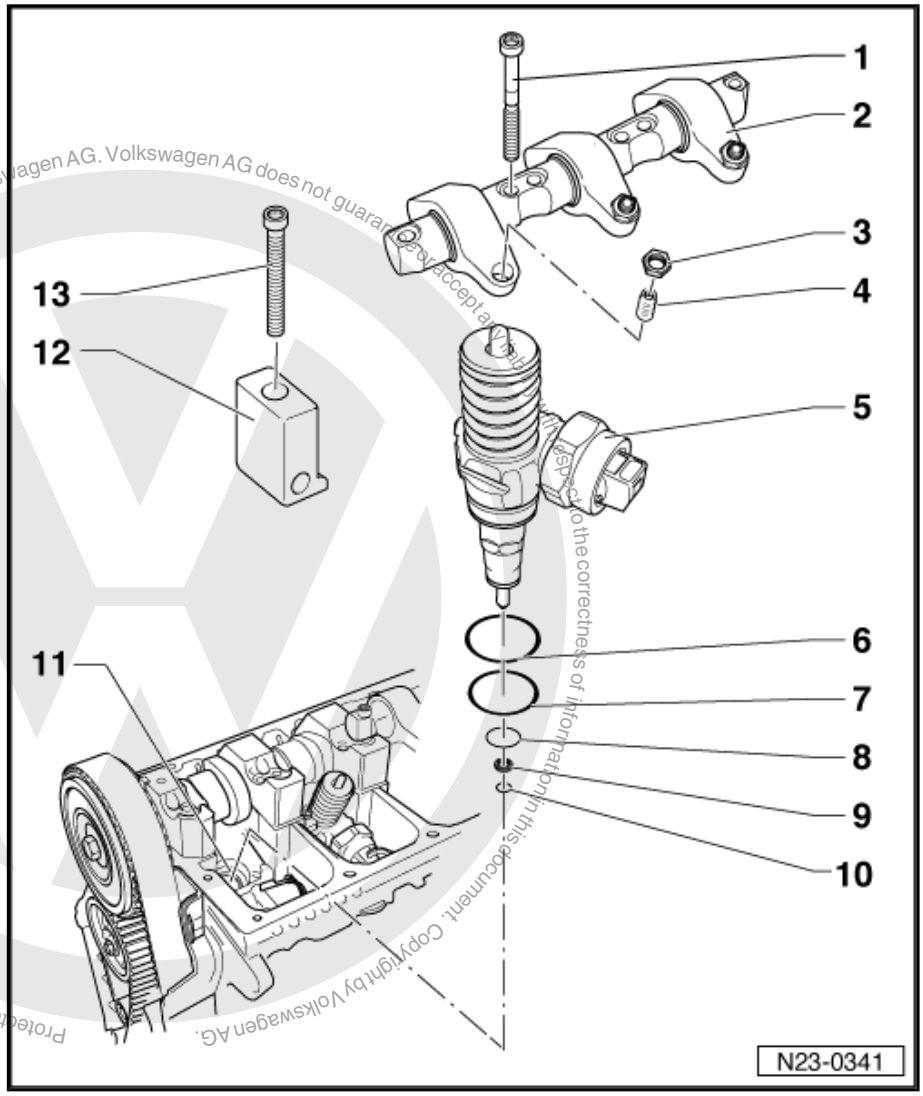

1 - 20 Nm + 1/4 turn (90°) further

- ❑ Renew

2 - Rocker arm shaft

- ❑ With rocker arms
- ❑ Removing and installing ⇒ page 159 .

3 - Lock nut

4 - Adjuster screw

- ❑ Renew if there are signs of wear and when fitting a new unit injector
- ❑ Lubricate contact surface to ball head pin of unit injector with grease -G 000 100-

5 - Unit injector

- ❑ Check ball pin for signs of wear, replace if necessary
- ❑ Lubricate contact surface to adjustment screw with grease -G 000 100-
- ❑ Removing and installing ⇒ page 159 .

6 - O-ring

- ❑ Renewing ⇒ page 157 .

7 - O-ring

- ❑ Renewing ⇒ page 157 .

8 - O-ring

- ❑ Renewing ⇒ page 157 .

9 - Heat shield seal

- ❑ Renew

10 - Circlip

11 - Cylinder head

12 - Clamping block

13 - 12 Nm + 3/4 turn (270°) further

- ❑ Renew

1.6 Removing and installing O-rings for unit injector

Special tools and workshop equipment required

Protected by copyright. Copying for private or commercial purposes, in part or in whole, is not permitted unless authorised by Volkswagen AG. Volkswagen AG does not guarantee or accept any liability with respect to the correctness of information in this document. Copyright by Volkswagen AG.

satelettronica

- Assembly sleeves -T10056-

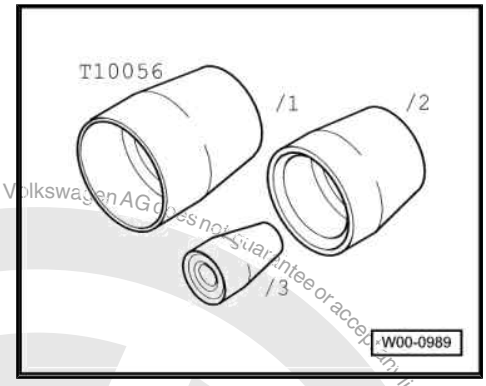

Removing

– Lever old O-rings very carefully out of unit injector.

– Above all ensure that burrs are not caused on O-ring seating.

Installing

Note

- *Always use the assembly sleeves to fit the O-rings. There is a danger of damaging the O-rings if the sleeves are not used.*
- *Gradual introduction of O-rings with no coloured markings. Note the correct allocation of O-rings to grooves: the thickness of the rings reduces towards injector nozzle:*
- *Prevent O-rings from rolling when sliding them on. The O-rings must not be twisted in their seats in unit injector.*

– Pull heat shield seat off together with securing clip.

– Clean seating surfaces for O-rings on unit injector very carefully.

– Slide assembly sleeve -T10056/1- onto limit stop on unit injector.

– Push the upper, thicker O-ring carefully onto the assembly sleeve -T10056/1- and into the seat on the unit injector.

– Remove the assembly sleeve.

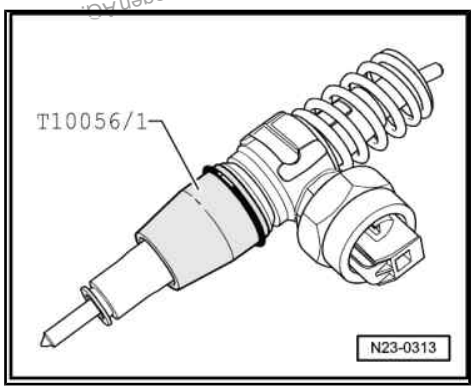

– Slide assembly sleeve -T10056/2- onto limit stop on unit injector.

– Slide the middle, thinner O-ring carefully onto assembly sleeve -T10056/2- and into seat on unit injector.

– Remove the assembly sleeve.

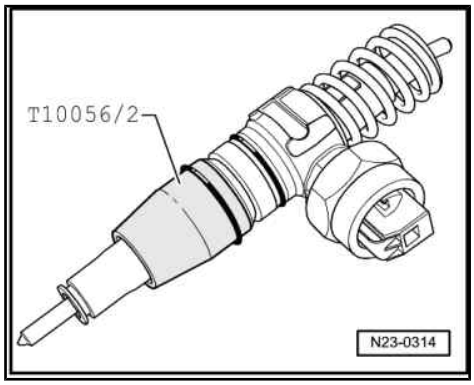

Protected by copyright. Copying for private or commercial purposes, in part or in whole, is not permitted unless authorised by Volkswagen AG. Volkswagen AG does not guarantee or accept any liability with respect to the correctness of information in this document. Copyright by Volkswagen AG.
satelettronica

– Slide assembly sleeve -T10056/3- onto limit stop on unit injector.
– Push the lower O-ring carefully onto the assembly sleeve -T10056/3- and into the seat of the unit injector.
– Remove the assembly sleeve.
– Fit new heat shield seal together with securing clip.

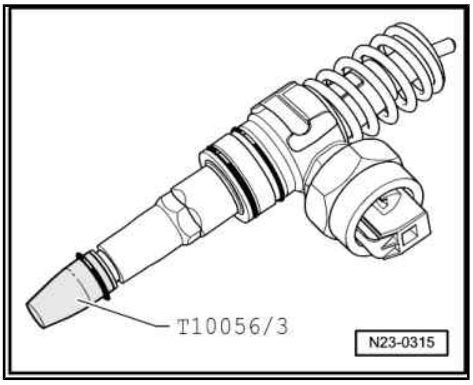

1.7 Removing and installing unit injector

Protected by copyright. Copyright by Volkswagen AG.
Volkswagen AG does not guarantee or accept any liability with respect to the correctness of information in this document. Copying for private or commercial purposes, in part or in whole, is not permitted unless authorised by Volkswagen AG.

Special tools and workshop equipment required

- Universal dial gauge bracket -VW 387-
- Special wrench, long reach -3410-
- Special wrench, long reach -T10054-
- Puller -T10055-
- Torque wrench -V.A.G 1331-

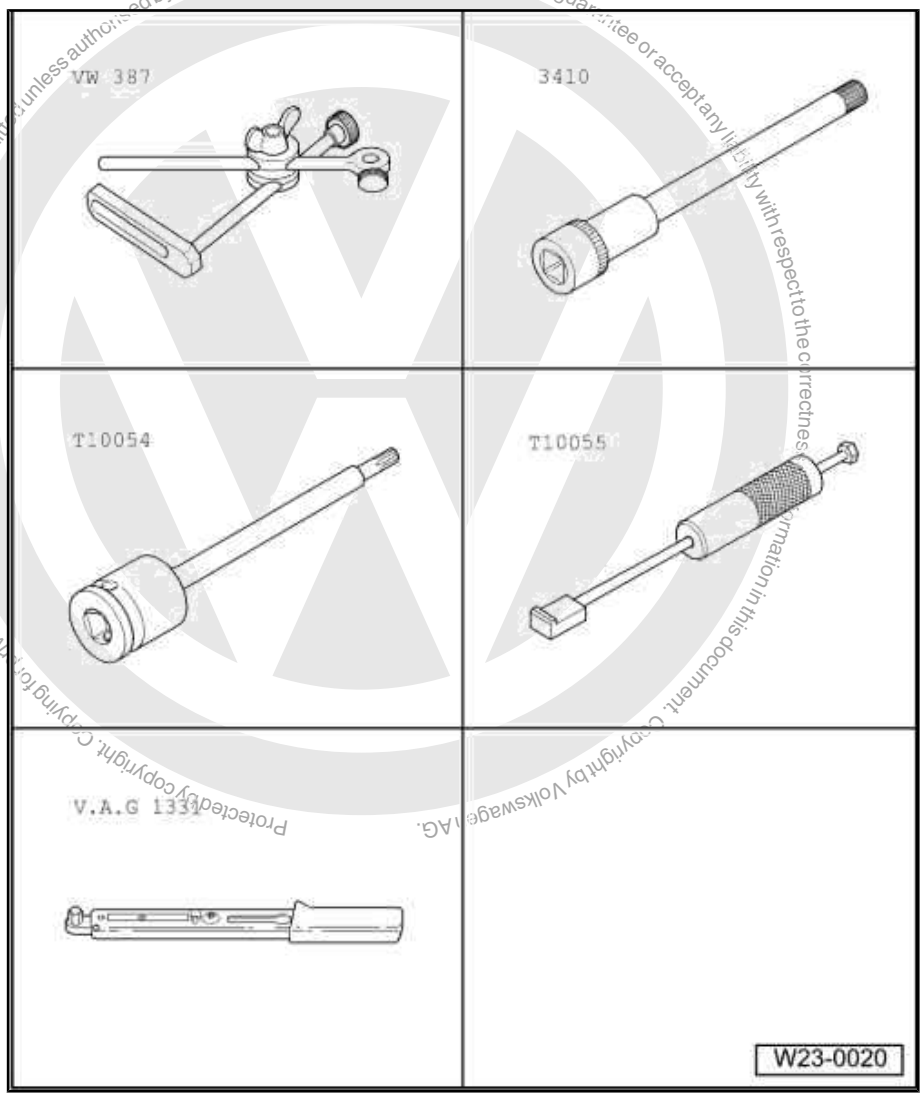

satelettronica

Note

Adjuster screw -1- and ball stud -2- of unit injector have been modified with the introduction of extended servicing intervals. Mixed installations are permissible for engines (older versions) without extended service intervals.

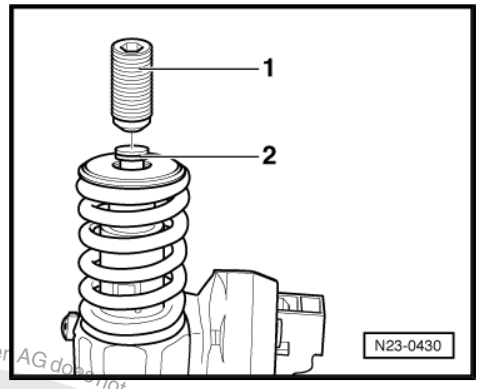

Removing

– Remove upper toothed belt guard and cylinder head cover.

– Turn crankshaft until the cam pair point evenly upwards for the unit injector which is to be removed.

– Loosen lock nuts of adjustment screws -1- and unscrew adjustment screws until the relevant rocker arm lies against the plunger springs of the unit injector.

– Remove rocker arm securing bolts -2- (from outwards to inwards) with socket -3410- and take rocker arm shaft off.

– Loosen tensioning block securing bolt -3- using special wrench, long reach -T10054- and remove tensioning block.

– Lever connector off unit injector with a screwdriver. To avoid canting, support opposite side of connector with light finger pressure. Observe unit injector cylinder allocation.

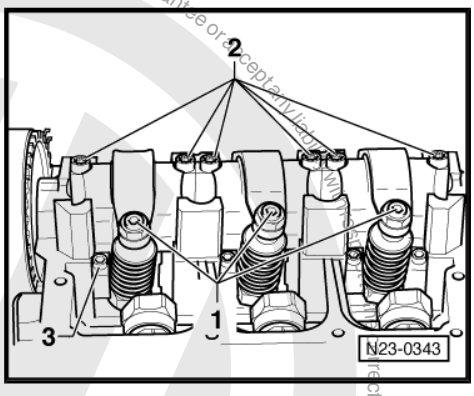

Protected by copyright. Copying for private or commercial purposes, in part or in whole, is not permitted unless authorised by Volkswagen AG. Volkswagen AG does not guarantee or accept any liability with respect to the correctness of information in this document. Copyright by Volkswagen AG.
satelettronica

Protected by copyright. Copyright by Volkswagen AG. Volkswagen AG does not accept any liability with respect to the correctness of information. Copying for private or commercial purposes, in part or in whole, is not permitted unless authorised by Volkswagen AG.

– Insert puller -T10055- in the slot on the side of the unit injector in place of the clamping block.

– Pull unit injector out of cylinder head seat with gentle taps.

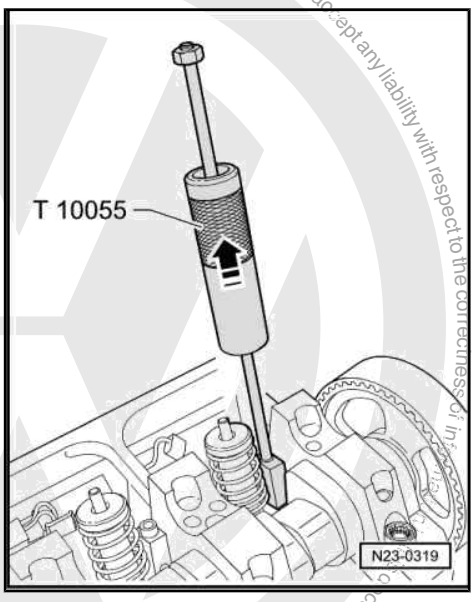

Installing

Note

- *If a new unit injector is installed, the appropriate adjustment screw in the rocker arm must also be renewed.*
- *Each time work is performed which requires the unit injector to be adjusted, the adjustment screw in the rocker arm and also the unit injector ball pin must be cleaned and checked for signs of wear. If wear is evident the ball pin and the adjustment screw must be renewed.*
- *On older version of unit injector drive, lubricate contact surface between ball pin and adjustment screw with grease -G 000 100- .*
- *New unit injectors are supplied with O-rings and heat shield seal.*

– Heat shield seal and O-rings must be renewed if old unit injector is reused ⇒ page 157 .

– Check that the three O-rings and the heat shield seal along with securing clip are seated correctly before installing unit injector.

Note

The seals must not be twisted.

– Oil the seals and fit the unit injector into the cylinder head with great care.

– Push the unit injector evenly into the cylinder head onto its limit stop.

– Insert the clamping block in the slot on the side of the unit injector.

Note

If the unit injector is not at right angles to the tensioning block the securing bolt may loosen and this can damage the unit injector or the cylinder head.

– Therefore align the unit injector as follows.

– Screw the new securing bolt into the tensioning block only so far that the unit injector can still be turned easily.

– Now align unit injector at right angles to camshaft mounting brackets.

– Check dimension “a” from outer edge of cylinder head to rounded edge of unit injector with a vernier gauge (measuring range at least 400 mm).

satelettronica

Note

Gradual introduction of unit injector with new solenoid valve nut. A mixed installation is permissible providing measurement "a" is adhered to.

Unit injector with old solenoid valve nut

Cylinder	Dimension "a"
1	244.2 ± 0.8 mm
2	156.2 ± 0.8 mm
3	64.8 ± 0.8 mm

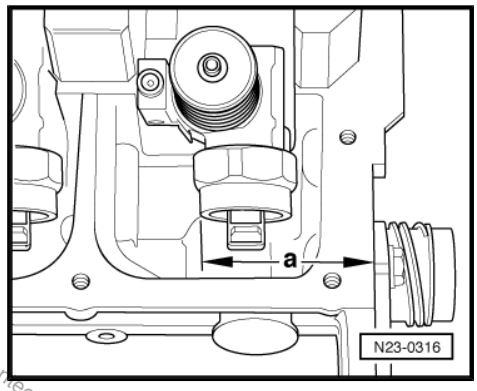

Unit injector with new solenoid valve nut

Cylinder	Dimension "a"
1	245.0 ± 0.8 mm
2	157.0 ± 0.8 mm
3	65.6 ± 0.8 mm

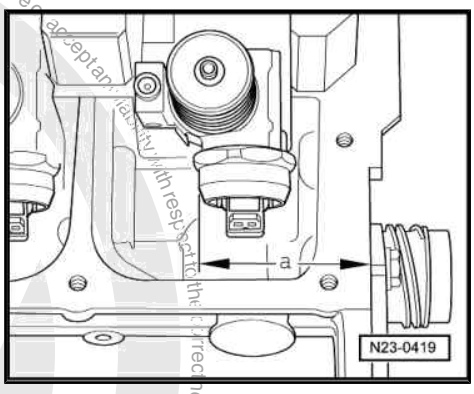

Continuation for all unit injectors

- Align unit injector and tighten securing bolt as follows: 12 Nm and turn 270° (3/4 turn) further (turning further can be done in several stages).
- Fit the rocker arm shaft and tighten the new securing bolts as follows.
- First tighten the inner and then both outer bolts hand tight evenly. Then using same sequence, tighten to 20 Nm and 90° (1/4 turn) further evenly.
- Fit the dial gauge onto the adjustment screw of the unit injector as shown.
- Turn the crankshaft in engine direction of rotation until the roller of the rocker arm is positioned on the peak of the drive cam. Roller side -arrow A- is at highest point, dial gauge -arrow B- is at lowest point.
- Remove dial gauge.
- Now turn adjustment screw into rocker arm until a firm resistance is felt (unit injector positioned at stop).

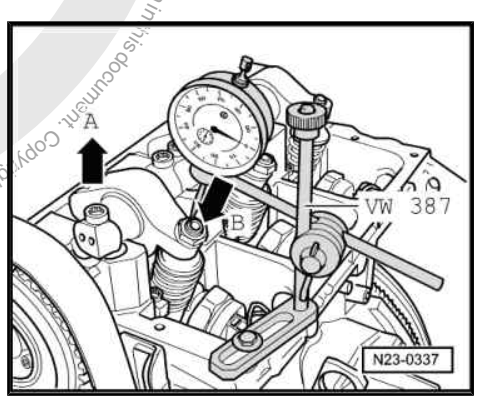

Protected by copyright. Copyright by Volkswagen AG.
Copyright by Volkswagen AG. Volkswagen AG does not guarantee or accept any liability with respect to the correctness of information in this document. Copying for private or commercial purposes, in part or in whole, is not permitted unless authorised by Volkswagen AG.
satelettronica

– Turn adjuster screw 225° back off stop.
– Hold adjuster screw in this position and tighten lock nut to 30 Nm.
– Push on unit injector connector and install cylinder head cover and toothed belt guard.

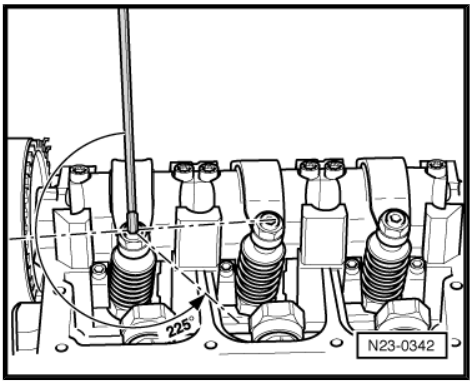

Protected by copyright. Copying for private or commercial purposes, in part or in whole, is not permitted unless authorised by Volkswagen AG. Volkswagen AG does not guarantee or accept any liability with respect to the correctness of information in this document. Copyright by Volkswagen AG.

satelettronica

Protected by copyright. Copyright by Volkswagen AG. Volkswagen AG does not guarantee or accept any liability with respect to the correctness of information in this document. Copyright by Volkswagen AG. Not permitted unless authorised by Volkswagen AG. Volkswagen AG does not guarantee or accept any liability with respect to the correctness of information in this document. Copyright by Volkswagen AG.

2 Checking components and functions

2.1 Checking voltage supply for diesel direct injection system

Special tools and workshop equipment required

- ♦ Adapter cable, 121-pin -V.A.G 1598/31-
- ♦ Hand multimeter -V.A.G 1526C- or multimeter -V.A.G 1715-
- ♦ Auxiliary measuring set -V.A.G 1594C-
- ♦ Current flow diagram

Test prerequisites:

- Battery voltage OK. (at least 11.5 V)

Test procedure

– Switch off ignition.

– Connect adapter cable, 121-pin -V.A.G 1598/31- to control unit wiring harness.

– Measure voltage between the following sockets:

1/2 and 4/5

37 and 4/5

Specification: approx. 0 V

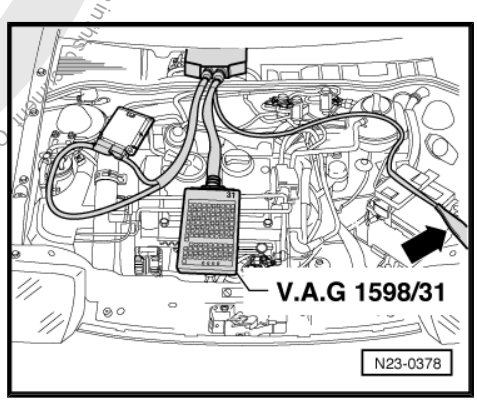

– Switch on ignition.

– Measure voltage again between the sockets:

1/2 and 4/5

37 and 4/5

Specification: approx. battery voltage

If the specifications are not attained:

– Check terminal 30 voltage supply relay -J317- .

– Check cable connections for open circuit, short circuit and transfer resistance at contacts according to current flow diagram.

If no fault is found in wiring and relay:

– Renew diesel direct injection system control unit -J248- ⇒ page 191 .

2.2 Checking engine speed sender -G28-

Engine speed sender -G28- is speed and reference mark sender. A failure stops the engine.

Special tools and workshop equipment required

- ♦ Adapter cable, 121-pin -V.A.G 1598/31-
- ♦ Hand multimeter -V.A.G 1526C- or multimeter -V.A.G 1715-
- ♦ Auxiliary measuring set -V.A.G 1594C-
- ♦ Current flow diagram

satelettronica

Test procedure

– Switch off ignition.

– Separate grey connector for engine speed sender -G28- -1- to sender.

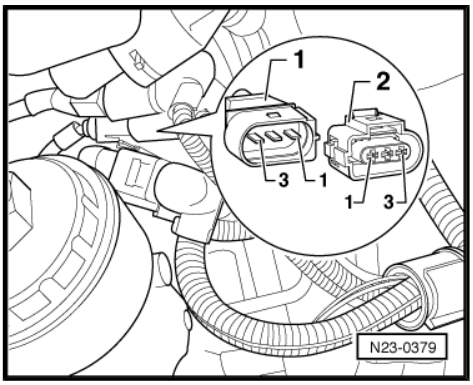

– Connect hand multimeter -V.A.G 1526C- (resistance measurement) using adapter cable from auxiliary measuring set -V.A.G 1594C- to contacts 1 and 2 of engine speed sender -G28- connector. Specification: approx. 450..550 Ω

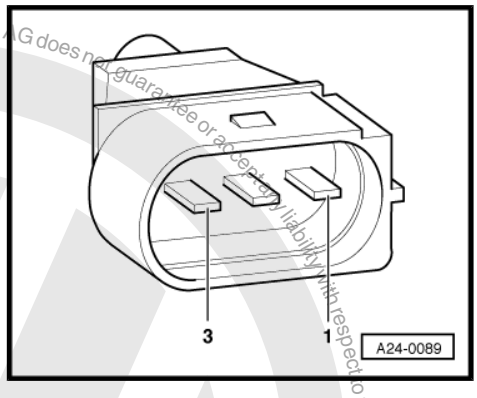

If the specification is not attained:

– Renew engine speed sender -G28- ⇒ page 50 .

If the specification is attained:

– Connect adapter cable, 121-pin -V.A.G 1598/31- to control unit wiring harness.

– Check wiring between adapter cable, 121-pin -V.A.G 1598/31- and 3-pin connector for open circuit according to current flow diagram.

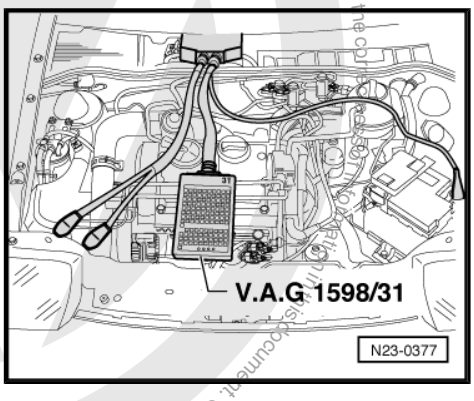

Contact 1 + socket 110

Contact 1 + socket 102

Contact 3 + socket 102

Wire resistance: max. 1.5 Ω.

– Check cables at 3-pin connector for short circuit to one another according to current flow diagram.

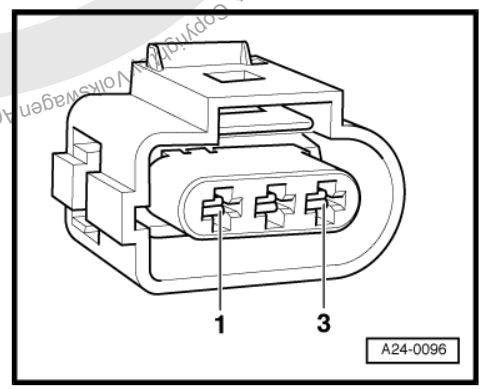

Specification: ∞ Ω.

If no fault in lines is detected:

– Renew diesel direct injection system control unit -J248- ⇒ page 191 .

2.3 Checking intake manifold pressure sender -G71- and altitude sender -F96-

Elevation sender is located in diesel direct injection system control unit -J248- . The intake manifold pressure sender -G71- is a separate component and is located together with intake manifold

Protected by copyright. Copying for private or commercial purposes, in part or in whole, is not permitted unless authorised by Volkswagen AG. Volkswagen AG does not guarantee or accept any liability with respect to the correctness and completeness of this document.
satelettronica

temperature sender -G72- in a common housing at intake manifold.

Special tools and workshop equipment required

- Fault reader -V.A.G 1551-
- Diagnosis lead -V.A.G 1551/3C-
- Turbocharger tester -V.A.G 1397A-

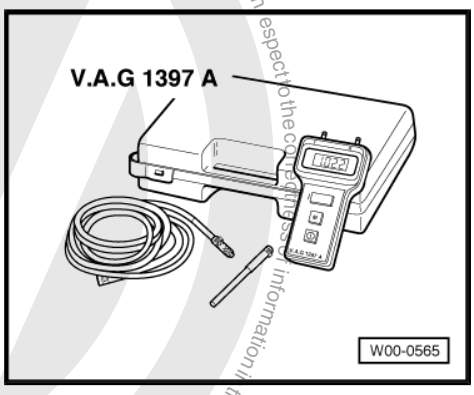

- Adapter cable, 121-pin -V.A.G 1598/31-
- Hand multimeter -V.A.G 1526C- or multimeter -V.A.G 1715-
- Auxiliary measuring set -V.A.G 1594C-
- Current flow diagram

Test procedure

– Connect fault reader -V.A.G 1551- and select engine electronics control unit with “address word 01”. The ignition must be switched on for this purpose. (Connecting fault reader and selecting engine electronics control unit ⇒ page 3 .)

Indicated on display:

```
Rapid data transfer                    HELP
Select function XX
```

– Press buttons 0 and 8 for function “Read measured value block” and confirm entry with Q button.

Indicated on display:

```
Reading measured value block           ->
Input display group number XXX
```

– Press buttons 0, 1 and 0 for “display group number 10” and confirm entry with Q button.

– Compare displays in display zone 2 (altitude sender -F96-), display zone 3 (intake manifold pressure sender -G71-) and display on turbocharger tester -V.A.G 1397A- with one another. Specification: Pressures must be very similar (tolerance ± 30 mbar).

```
Read measured value block 10           ->
   0 mg/H   1027 mbar   1013 mbar  0.0 %
```

Note

The turbocharger tester -V.A.G 1397A- is required to provide an independent figure for comparison. The turbocharger tester -V.A.G 1397A- must be set to measuring range I (absolute pressure). A barometer can be used instead.

Value in display zone 2 deviates:

– Press the → button.

– Press buttons 0 and 6 for function “End output” and confirm entry with Q button.

Protected by copyright. Copyright by Volkswagen AG. Volkswagen AG does not guarantee or accept any liability with respect to the correctness of information in this document. Copyright by Volkswagen AG.
satelettronica

– Switch off ignition.

– Renew diesel direct injection system control unit -J248- ⇒ page 191

Value in display zone 3 deviates:

– Press the ⏎ button.

– Press buttons 0 and 6 for function “End output” and confirm entry with Q button.

– Start engine and select function 08 “Read measured value block” again.

– Press buttons 0, 1 and 0 for “display group number 10” and confirm entry with Q button.

– Disconnect connector for intake manifold pressure sender -G71- ⇒ page 155 .

– Observe value in display zone 3 (intake manifold pressure sender -G71-).

– It must fall constantly and then have the same value as the altitude sender (display zone 2).

```
Read measured value block 10          ->
   515 mg/H   1009mbar   1009 mbar   0.0 %
```

If the specification is attained:

– Renew intake manifold pressure sender -G71- with intake manifold temperature sender -G72- .

If the specification is not attained:

– Press the ⏎ button.

– Press buttons 0 and 6 for function “End output” and confirm entry with Q button.

– Switch off ignition.

– Connect adapter cable, 121-pin -V.A.G 1598/31- to control unit wiring harness.

– Check wiring between adapter cable, 121-pin -V.A.G 1598/31- and connector for open circuit referring to current flow diagram.

Contact 3 + socket 31

Contact 4 + socket 71

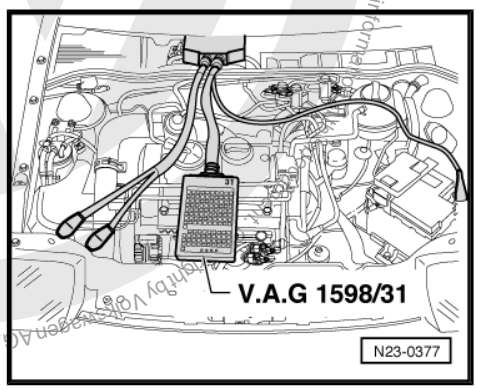

Wire resistance: max. 1.5 Ω.

– Also check wiring for short to one another, short to vehicle earth and short to battery positive.

Specification: ∞ Ω.

If no fault in lines is detected:

– Renew diesel direct injection system control unit -J248- ⇒ page 191 .

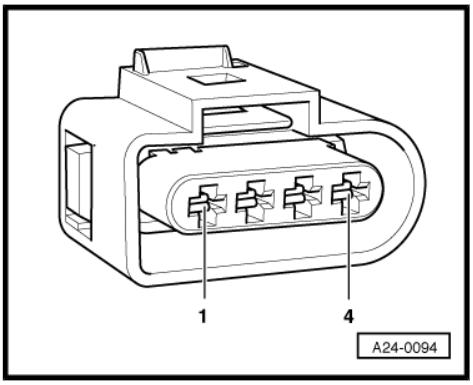

Protected by copyright. Copying for private or commercial purposes, in part or in whole, is not permitted unless authorised by Volkswagen AG. Volkswagen AG does not guarantee or accept any liability with respect to the correctness of information.
satelettronica

2.4 Checking coolant temperature sender - G62-

Special tools and workshop equipment required

- Fault reader -V.A.G 1551-
- Diagnosis lead -V.A.G 1551/3C-
- Adapter cable, 121-pin -V.A.G 1598/31-
- Hand multimeter -V.A.G 1526C- or multimeter -V.A.G 1715-
- Auxiliary measuring set -V.A.G 1594C-
- Current flow diagram

Test procedure

– Connect fault reader -V.A.G 1551- and select engine electronics control unit with “address word 01”. Engine must be idling. (Connecting fault reader and selecting engine electronics control unit ⇒ page 3 .)

Indicated on display:

```
Rapid data transfer                    HELP
Select function XX
```

– Press buttons 0 and 8 for function “Read measured value block” and confirm entry with Q button.

Indicated on display:

```
Reading measured value block            ->
Input display group number XXX
```

– Press buttons 0, 0 and 7 for “display group number 7” and confirm entry with Q button.

– Indicated on display:

```
Read measured value block 7             ->
15.4 °C      0 %      15.9 °C      16.7 °C
```

– Check coolant temperature value in display zone 4. The temperature value must Increase uniformly and without interruption.

– In case of faults the fuel temperature or - 5.4 °C is displayed as a substitute.

– If no realistic display appears in display zone 4 or the fuel temperature or - 5.4 °C is displayed as a substitute, check coolant temperature sender -G62- and wiring to sender as follows:

– Press the → button.

– Press buttons 0 and 6 for function “End output” and confirm entry with Q button.

– Switch off ignition.

– Pull connector off coolant temperature sender -G62- ⇒ page 155 .

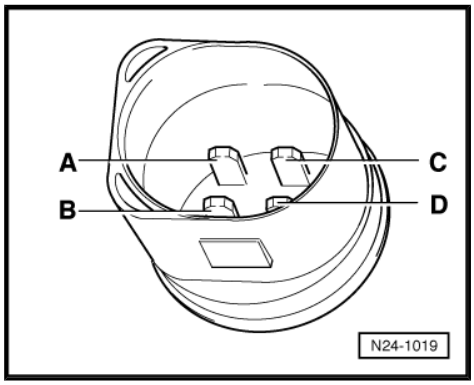

Protected by copyright. Copying for private or commercial purposes, in part or in whole, is not permitted unless authorised by Volkswagen AG. Volkswagen AG does not guarantee or accept any liability with respect to the correctness of information in this document. Copyright by Volkswagen AG.
satelettronica

– Measure resistance between contacts C + D on coolant temperature sender -G62- . Specification see diagram

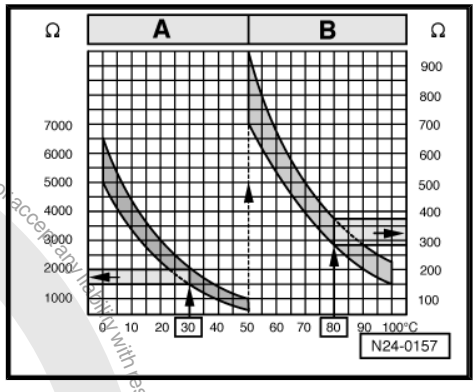

Scale -A- shows resistance values for temperature range 0...50 °C and scale -B- the values for temperature range 50...100 °C.

Examples:

- 30 °C corresponds to a resistance of 1500..2000 Ω
- 80 °C corresponds to a resistance of 275..375 Ω

If the specification is not attained:

– Renew coolant temperature sender -G62- .

If the specification is attained:

– Connect adapter cable, 121-pin -V.A.G 1598/31- to control unit wiring harness.

– Check wiring between adapter cable, 121-pin -V.A.G 1598/31- and 4-pin connector for open circuit according to current flow diagram.

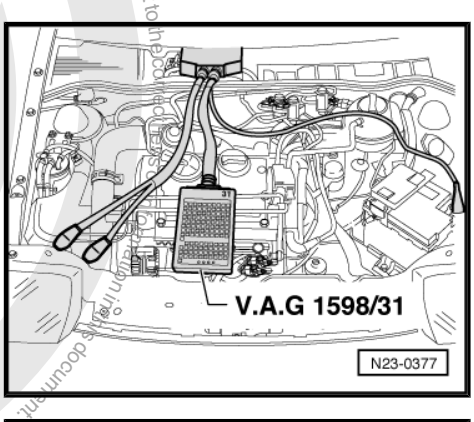

Contact 3 + socket 112

Contact 4 + socket 104

Wire resistance: max. 1.5 Ω.

– Also check wiring for short to one another, short to vehicle earth and short to battery positive. Specification: ∞ Ω.

If no fault in lines is detected:

– Renew diesel direct injection system control unit -J248- ⇒ page 191 .

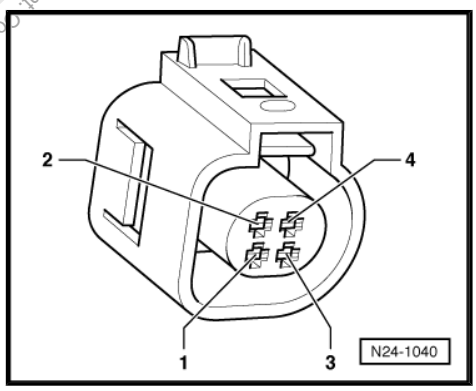

2.5 Checking brake light switch -F- and brake pedal switch -F47-

Because the injection system operates with an accelerator pedal sender (potentiometer) which may be defective, the engine is regulated for reasons of safety when the brakes are operated. To do this the control unit requires signals from the brake light switch and also the brake pedal switch. This means that if the brakes are operated when the accelerator pedal is held at a constant position the engine is immediately reduced to idling speed. Incorrectly adjusted switches may lead to unrequired regulating action

Special tools and workshop equipment required

- Fault reader -V.A.G 1551-
- Diagnosis lead -V.A.G 1551/3C-
- Adapter cable, 121-pin -V.A.G 1598/31-
- Hand multimeter -V.A.G 1526C- or multimeter -V.A.G 1715-
- Auxiliary measuring set -V.A.G 1594C-

satelettronica

- Current flow diagram

Test procedure

– Connect fault reader -V.A.G 1551- and select engine electronics control unit with “address word 01”. The ignition must be switched on for this purpose. (Connecting fault reader and selecting engine electronics control unit ⇒ page 3 .)

Indicated on display:

```
Rapid data transfer                    HELP
Select function XX
```

– Press buttons 0 and 8 for function “Read measured value block” and confirm entry with Q button.

Indicated on display:

```
Reading measured value block           ->
Input display group number XXX
```

– Press buttons 0, 0 and 6 for “display group number 6” and confirm entry with Q button.

– Observe display in display zone 2.

Specification: 0 0 0

```
Read measured value block 6            ->
0 km/h     0  0  0     0.0 %     255
```

– Operate brake pedal slowly.

Specification: 0 1 1 Both displays must change from 0 to 1 at same time.

```
Read measured value block 6            ->
0 km/h     0  1  1     0.0 %     255
```

- Middle display = brake pedal switch -F47- .
- Right display = brake light switch -F- .

– Release brake pedal slowly into rest position again.

Both displays must change from 1 to 0 again.

```
Read measured value block 6            ->
     0 km/h     0  0  0     0.0 %     255
```

If one or both displays do not change:

– Check switches or wiring to the switches: ⇒ Current flow diagrams, Electrical fault finding and Fitting locations

2.6 Checking clutch pedal switch -F36-

The clutch pedal switch -F36- informs the control unit whether the clutch is engaged or disengaged. If the clutch is being operated the injected quantity is momentarily reduced. This prevents engine jerks.

Special tools and workshop equipment required

- Fault reader -V.A.G 1551-
- Diagnosis lead -V.A.G 1551/3C-
- Adapter cable, 121-pin -V.A.G 1598/31-
- Hand multimeter -V.A.G 1526C- or multimeter -V.A.G 1715-
- Auxiliary measuring set -V.A.G 1594C-
- Current flow diagram

Test procedure

– Connect fault reader -V.A.G 1551- and select engine electronics control unit with “address word 01”. The ignition must be switched on for this purpose. (Connecting fault reader and selecting engine electronics control unit ⇒ page 3 .)

Indicated on display:

```
Rapid data transfer                    HELP
Select function XX
```

satelettronica

– Press buttons 0 and 8 for function “Read measured value block” and confirm entry with Q button.

Indicated on display:

```
Reading measured value block          ->
Input display group number XXX
```

– Press buttons 0, 0 and 6 for “display group number 6” and confirm entry with Q button.

– Observe display in display zone 2.

Specification: 0 0 0

```
Read measured value block 6           ->
     0 km/h     0  0  0     0.0 %     255
```

– Operate clutch pedal. The left position must change to 1.

Specification: 1 0 0

```
Read measured value block 6           ->
     0 km/h     1  0  0     0.0 %     255
```

If the specifications are not attained:

– Press the → button.

– Press buttons 0 and 6 for function “End data transfer” and confirm entry with Q button.

– Switch off ignition.

– Pull connector off clutch pedal switch -F36- ⇒ page 155 .

– Measure resistance at switch contacts. Specification Clutch not depressed: max. 10 Ω Clutch depressed: ∞ Ω

If the specifications are not attained:

– Renew clutch pedal switch -F36- .

If the specifications are attained:

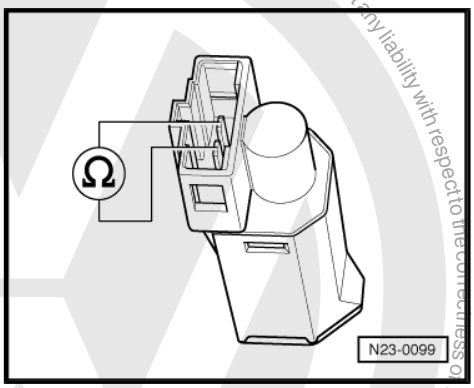

– Connect adapter cable, 121-pin -V.A.G 1598/31- to control unit wiring harness.

– Check wiring between test box and connector for open circuit referring to current flow diagram.

Contact 1 + socket 1

Contact 1 + socket 2

Contact 1 + socket 66

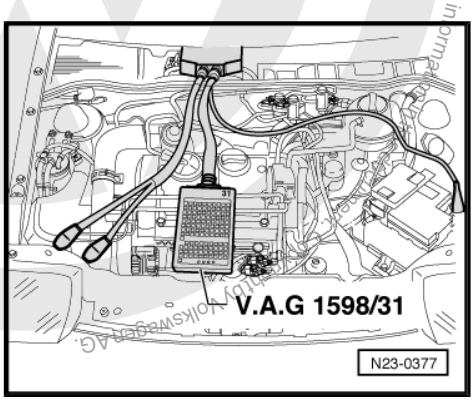

Protected by copyright. Copying for private or commercial purposes, in part or in whole, is not permitted unless authorised by Volkswagen AG. Volkswagen AG does not guarantee or accept any liability with respect to the correctness of information.
satelettronica

Wire resistance: max. 1.5 Ω.

– Also check wiring for short to one another, short to vehicle earth and short to battery positive.

Specification: ∞ Ω.

If no fault in lines is detected:

– Renew diesel direct injection system control unit -J248- ⇒ page 191 .

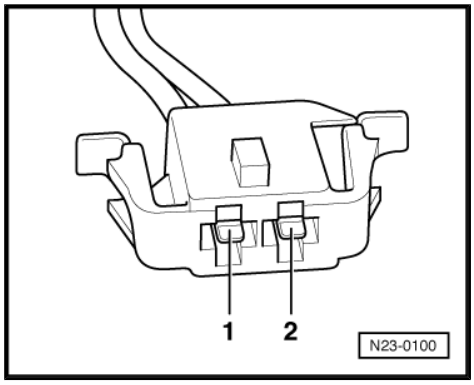

2.7 Checking intake manifold temperature sender -G72-

The intake manifold temperature sender -G72- is located together with intake manifold pressure sender -G71- in a common housing at intake manifold.

Special tools and workshop equipment required

- Fault reader -V.A.G 1551-
- Diagnosis lead -V.A.G 1551/3C-
- Adapter cable, 121-pin -V.A.G 1598/31-
- Hand multimeter -V.A.G 1526C- or multimeter -V.A.G 1715-
- Auxiliary measuring set -V.A.G 1594C-
- Current flow diagram

Test procedure

– Connect fault reader -V.A.G 1551- and select engine electronics control unit with “address word 01”. Engine must be idling. (Connecting fault reader and selecting engine electronics control unit ⇒ page 3.)

Indicated on display:

```
Rapid data transfer                    HELP
Select function XX
```

– Press buttons 0 and 8 for function “Read measured value block” and confirm entry with Q button.

Indicated on display:

```
Reading measured value block            ->
Input display group number XXX
```

– Press buttons 0, 0 and 7 for “display group number 7” and confirm entry with Q button.

Indicated on display:

```
Read measured value block 7             ->
15.4 °C      0 %      15.9 °C      16.7 °C
```

– If no realistic display appears in display zone 3 or a substitute temperature of 135.9 °C is displayed, check intake manifold temperature sender -G72- and wiring to sender as follows:

– Press the → button.

– Press buttons 0 and 6 for function “End output” and confirm entry with Q button.

– Switch off ignition.

Copyright by Volkswagen AG. Volkswagen AG does not guarantee or accept any liability with respect to the correctness of information in this document. Copying for private or commercial purposes, in part or in whole, is not permitted unless authorised by Volkswagen AG.
satelettronica

– Remove connector from intake manifold pressure sender -G72- ⇒ page 155 .

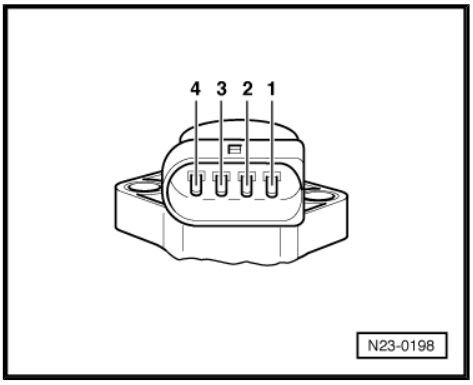

– Measure resistance between sender contacts 1+2 on intake manifold temperature sender -G72- . Specification see diagram

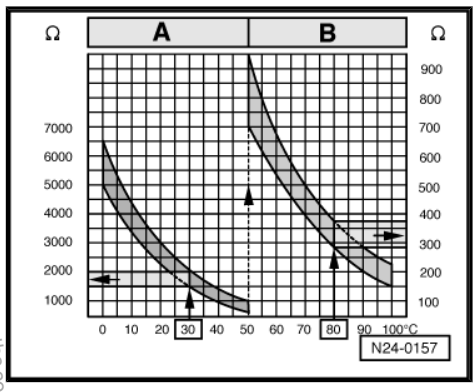

Scale -A- shows resistance values for temperature range 0...50 °C and scale -B- the values for temperature range 50...100 °C.

Examples:

- ♦ 30 °C corresponds to a resistance of 1500..2000 Ω
- ♦ 80 °C corresponds to a resistance of 275..375 Ω

If the specification is not attained:

– Renew intake manifold temperature sender -G72- .

If the specification is attained:

– Connect adapter cable, 121-pin -V.A.G 1598/31- to control unit wiring harness.

– Check wiring between adapter cable, 121-pin -V.A.G 1598/31- and connector for open circuit referring to current flow diagram.

Contact 1 + socket 52

Contact 2 + socket 73

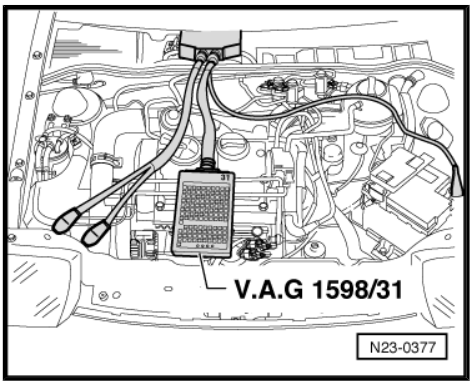

Wire resistance: max. 1.5 Ω.

– Also check wiring for short to one another, short to vehicle earth and short to battery positive.

Specification: ∞ Ω.

If no fault in lines is detected:

– Renew diesel direct injection system control unit -J248- ⇒ page 191 .

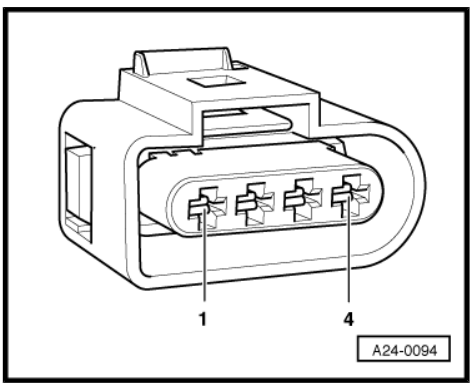

2.8 Checking fuel temperature sender -G81-

Special tools and workshop equipment required

- ♦ Fault reader -V.A.G 1551-

Protected by copyright. Copyright by Volkswagen AG. Volkswagen AG does not guarantee or accept any liability with respect to the correctness of information in this document. Copyright by Volkswagen AG. Reproduction, in whole or in part, is not permitted for commercial purposes.

satelettronica

- Diagnosis lead -V.A.G 1551/3C-
- Adapter cable, 121-pin -V.A.G 1598/31-
- Hand multimeter -V.A.G 1526C- or multimeter -V.A.G 1715-
- Auxiliary measuring set -V.A.G 1594C-
- Current flow diagram

Test procedure

– Connect fault reader -V.A.G 1551- and select engine electronics control unit with “address word 01”. Engine must be idling. (Connecting fault reader and selecting engine electronics control unit ⇒ page 3 .)

Indicated on display:

```
Rapid data transfer                    HELP
Select function XX
```

– Press buttons 0 and 8 for function “Read measured value block” and confirm entry with Q button.

Indicated on display:

```
Reading measured value block           ->
Input display group number XXX
```

– Press buttons 0, 0 and 7 for “display group number 7” and confirm entry with Q button.

Indicated on display:

```
Read measured value block 7            ->
15.4 °C      0 %     15.9 °C     16.7 °C
```

– If no realistic display appears in display zone 1 or a substitute temperature of -5.4 °C is displayed, check fuel temperature sender -G81- and wiring to sender as follows:

– Press the → button.

– Press buttons 0 and 6 for function “End output” and confirm entry with Q button.

– Switch off ignition.

– Pull connector off fuel temperature sender -G81- ⇒ page 155 .

– Measure resistance between contacts 1+2 on fuel temperature sender -G81- . Specification see diagram

Scale -A- shows resistance values for temperature range 0...65 °C and scale -B- the values for temperature range 65...100 °C.

Examples:

- 30 °C corresponds to a resistance of 3790...4270 Ω
- 80 °C corresponds to a resistance of 600...600 Ω

If the specification is not attained:

– Renew fuel temperature sender -G81- .

If the specification is attained:

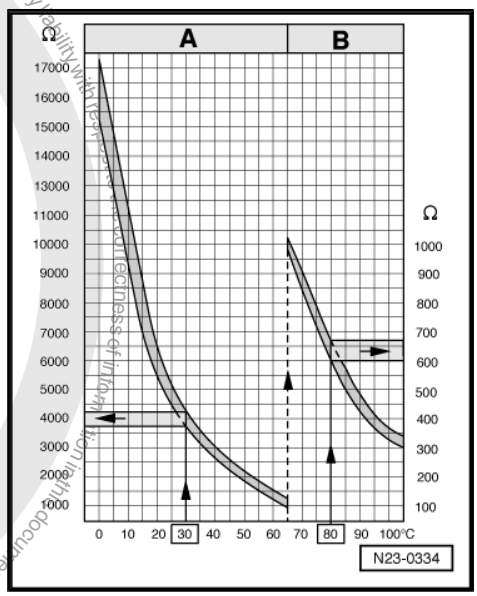

satelettronica

– Connect adapter cable, 121-pin -V.A.G 1598/31- to control unit wiring harness.

– Check wiring between adapter cable, 121-pin -V.A.G 1598/31- and connector for open circuit referring to current flow diagram.

Contact 1 + socket 103

Contact 1 + socket 111

Wire resistance: max. 1.5 Ω.

– Also check wiring for short to one another, short to vehicle earth and short to battery positive.

Specification: ∞ Ω.

If no fault in lines is detected:

– Renew diesel direct injection system control unit -J248- ⇒ page 191 .

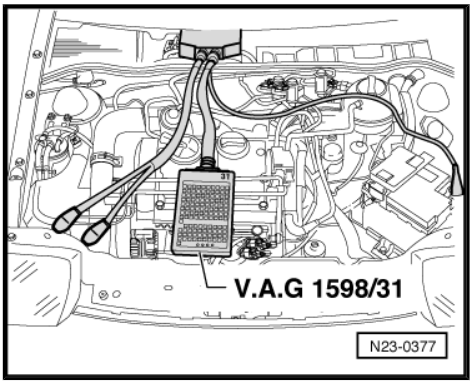

2.9 Checking air mass meter -G70-

The air mass meter signal is used by the control unit to calculate the quantity injected and to control the required exhaust gas recirculation. The smaller the signal from air mass meter -G70- the smaller the quantity of fuel injected.

Special tools and workshop equipment required

- Fault reader -V.A.G 1551-
- Diagnosis lead -V.A.G 1551/3C-
- Adapter cable, 121-pin -V.A.G 1598/31-
- Hand multimeter -V.A.G 1526C- or multimeter -V.A.G 1715-
- Auxiliary measuring set -V.A.G 1594C-
- Current flow diagram

Test procedure

– Connect fault reader -V.A.G 1551- and select engine electronics control unit with “address word 01”. Engine must be idling. (Connecting fault reader and selecting engine electronics control unit ⇒ page 3 .)

WARNING

Secure fault reader to rear seat and operate from this position.

Indicated on display:

```
Rapid data transfer                    HELP
Select function XX
```

– Press buttons 0 and 8 for function “Read measured value block” and confirm entry with Q button.

Indicated on display:

```
Reading measured value block           ->
Input display group number XXX
```

– Press buttons 0, 1 and 0 for “display group number 10” and confirm entry with Q button.

– Observe display in display zone 1.

– Specification: 200...320 mg/H

```
Read measured value block 10           ->
209 mg/H   1027 mbar   1011 mbar  0.0 %
```

If the specification is not attained:

Protected by copyright. Copying for private or commercial purposes, in part or in whole, is not permitted unless authorised by Volkswagen AG. Volkswagen AG does not guarantee or accept any liability with respect to the correctness of information in this document. Copyright by Volkswagen AG.
satelettronica

– Check exhaust gas recirculation ⇒ page 198 .

If the specification is attained:

– Accelerate vehicle from approx. 1500 rpm using full throttle.

– At approx. 3000 rpm, press PRINT button on fault reader -V.A.G 1551- . Accelerator pedal must be fully depressed at this moment.

– Specification in display zone 4: 100 % (accelerator pedal position)

```
Read measured value block 10          ->
830 mg/H   1027 mbar   1850 mbar  100 %
```

If the specification is not attained:

– Repeat test and accelerate vehicle at full throttle.

– Specification in display zone 1 (mass of air drawn in): above 700 mg/H

```
Read measured value block 10          ->
830 mg/H   1027 mbar   1850 mbar  100 %
```

If the specification is not attained:

– Renew air mass meter -G70- .

If a constant 539 mg/H (predetermined replacement value) is displayed in display zone 1.

– Press the → button.

– Press buttons 0 and 6 for function “End output” and confirm entry with Q button.

– Switch off ignition.

– Separate connector for air mass meter -G70- ⇒ page 155 .

– Switch on ignition.

– Measure voltage supply for air mass meter -G70- between following connector contacts:

Connector on air mass meter -G70- contact	Specification
2 + earth	App. battery voltage
2 + 3	App. battery voltage
4 + earth	Approx. 5 V
4 + 3	Approx. 5 V

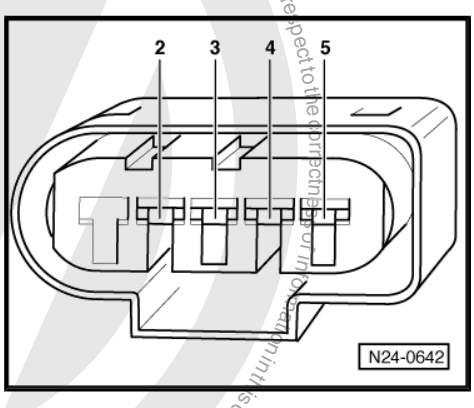

If the specifications are not attained:

– Switch off ignition.

– Connect adapter cable, 121-pin -V.A.G 1598/31- to control unit wiring harness.

– Check wiring between adapter cable, 121-pin -V.A.G 1598/31- and connector for open circuit referring to current flow diagram.

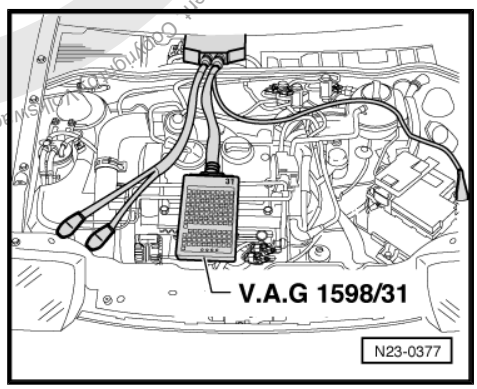

Contact 2 + socket 1 and 2

Contact 3 + socket 49

Contact 4 + socket 30

Contact 5 + socket 68

satelettronica

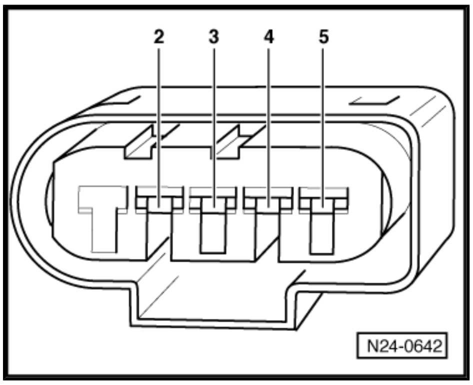

Wire resistance: max. 1.5 Ω.

– Also check wiring for short to one another, short to vehicle earth and short to battery positive.

Specification: ∞ Ω.

If no fault in lines is detected:

– Renew diesel direct injection system control unit -J248- ⇒ page 191 .

2.10 Checking intake manifold flap change-over

Special tools and workshop equipment required

♦ Hand vacuum pump -VAS 6213-

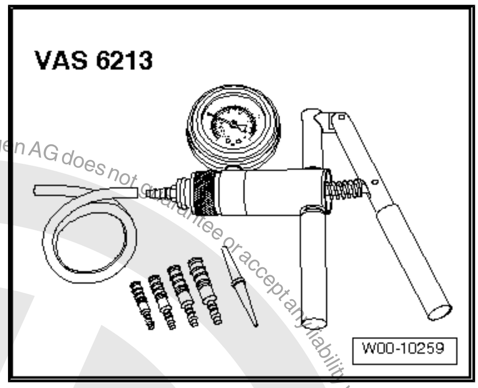

♦ Adapter cable, 121-pin -V.A.G 1598/31-

♦ Hand multimeter -V.A.G 1526C- or multimeter -V.A.G 1715-

♦ Auxiliary measuring set -V.A.G 1594C-

♦ Current flow diagram

Checking function

– Start engine and run at idling speed.

– Switch off ignition.

– Observe positioning lever on intake manifold flap (2nd person required).

– The intake manifold flap must, after switching off ignition, close and after approx. 3 seconds open again.

If change-over does not occur, the following checks must be carried out.

– Check intake manifold flap change-over mechanics for freedom of movement. To do this, operate rods by hand.

– Check function of vacuum actuator with hand vacuum pump -VAS 6213- .

– Check that vacuum lines are connected correctly.

If no fault is found in the mechanical components:

– Check variable intake manifold flap change-over valve -N239- .

Protected by copyright. Copying for private or commercial purposes, in part or in whole, is not permitted unless authorised by Volkswagen AG. Volkswagen AG does not guarantee or accept any liability with respect to the correctness of information in this document. Copyright by Volkswagen AG.

sateletronica

Test procedure

– Pull connector off variable intake manifold flap change-over valve -N239- ⇒ page 155 .

– Measure resistance between contacts of variable intake manifold flap change-over valve -N239- .

Specification: 25...45 Ω

If the specification is not attained:

– Renew variable intake manifold flap change-over valve -N239- .

If the specification is attained:

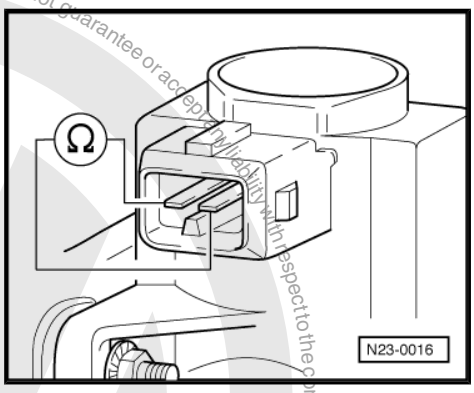

– Set multimeter to measure voltage and connect to contacts 1 + 2 of disconnected connector from intake manifold flap change-over valve.

– Start engine and run at idling speed.

Specification: Battery voltage

– Switch off ignition.

– The voltage value must fall to 0 V after approx. 3 seconds.

If the voltage values do not change as described:

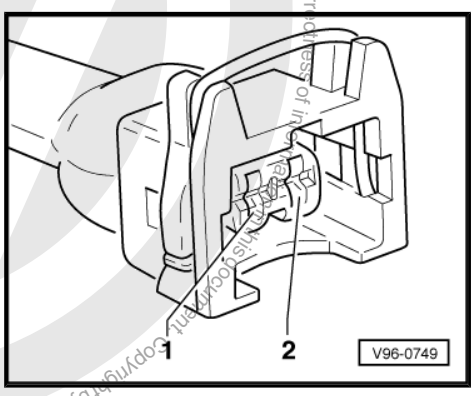

– Connect adapter cable, 121-pin -V.A.G 1598/31- to control unit wiring harness.

– Check wiring between adapter cable, 121-pin -V.A.G 1598/31- and connector for open circuit referring to current flow diagram.

Contact 1 + socket 1 and 2

Contact 1 + socket 81

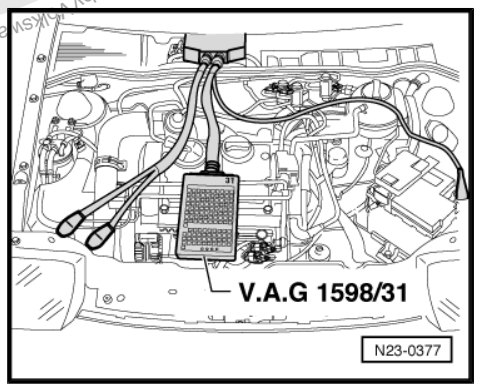

Wire resistance: max. 1.5 Ω.

– Also check wiring for short to one another, short to vehicle earth and short to battery positive.

Specification: ∞ Ω.

If no fault in lines is detected:

– Renew diesel direct injection system control unit -J248- ⇒ page 191 .

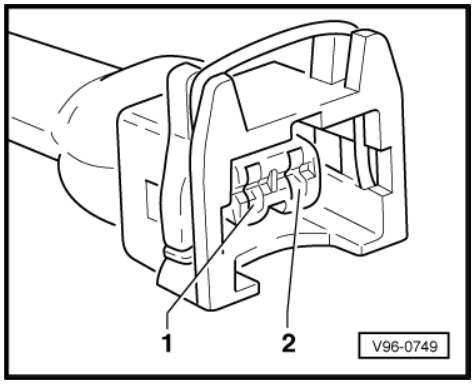

2.11 Checking unit injector valves

Special tools and workshop equipment required

Protected by copyright. Copyright. Copyright by Volkswagen AG. Volkswagen AG does not guarantee or accept any liability with respect to the correctness of information. This document, in part or in whole, is not permitted unless authorised by Volkswagen AG.
satelettronica

- Fault reader -V.A.G 1551-
- Diagnosis lead -V.A.G 1551/3C-
- Adapter cable, 121-pin -V.A.G 1598/31-
- Hand multimeter -V.A.G 1526C- or multimeter -V.A.G 1715-
- Auxiliary measuring set -V.A.G 1594C-
- Current flow diagram

Test procedure

– Connect fault reader -V.A.G 1551- and select engine electronics control unit with “address word 01”. Engine must be idling. (Connecting fault reader and selecting engine electronics control unit ⇒ page 3 .)

Note

If the engine does not start, check resistance of unit injector valves ⇒ page 179 .

Indicated on display:

```
Rapid data transfer                    HELP
Select function XX
```

– Press buttons 0 and 8 for function “Read measured value block” and confirm entry with Q button.

Indicated on display:

```
Reading measured value block            ->
Input display group number XXX
```

– Press buttons 0, 1 and 8 for “display group number 18” and confirm entry with Q button.

Indicated on display: display zone :1 = Cyl. 1; 2 = Cyl. 2; 3 = Cyl. 3

```
Read measured value block 18            ->
0                    0                   0
```

– A “0” for fault free control must be displayed in all 3 display zones.

If a number other than 0 is displayed:

– Press the → button.

– Press buttons 0 and 6 for function “End data transfer” and confirm entry with Q button.

– Switch off ignition.

– Check resistance of unit injector valves ⇒ Page ⇒ page 179 .

2.11.1 Checking resistance of unit injector valves

– Disconnect unit injector connector on cylinder head ⇒ page 155 .

– Check resistance of unit injector valves between connector contacts:

Cyl. 1: contacts 6 + 3

Cyl. 2: contacts 6 +5

Cyl. 3: contacts 6 +2

Protected by copyright. Copying for private or commercial purposes, in part or in whole, is not permitted unless authorised by Volkswagen AG. Volkswagen AG does not guarantee or accept any liability with respect to the correctness of information in this document. Copyright by Volkswagen AG.
Satelettronica

Specification: about 0.5 Ω

– Also check wiring for short to one another and short to vehicle earth.

Specification: ∞ Ω.

If the specification is attained:

– Check wiring to control unit using current flow diagram ⇒ page 180 .

If the specification is not attained:

– Remove upper toothed belt guard and cylinder head cover.

– Lever connectors off all 3 unit injectors using a screwdriver. To avoid canting, support opposite side of connector with light finger pressure.

– Check resistance of unit injector valves at contacts of unit injector valves.

Specification: about 0.5 Ω

If the specification is not attained:

– Renew defective unit injector ⇒ page 159 .

If the specification is attained:

– Check wiring between unit injector connection and contact 2 of all 3 injectors for open circuit.

Cyl. 1: contact 2 (grey) + contact 3

Cyl. 2: contact 2 (red) + contact 5

Cyl. 3: contact 2 (yellow) + contact 2

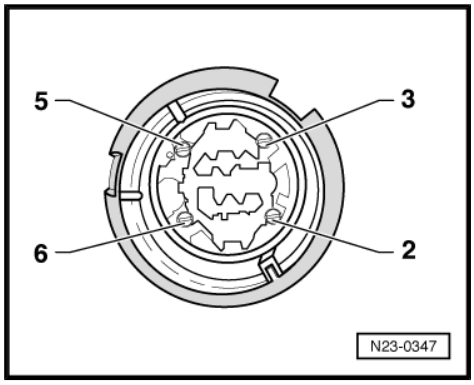

Wire resistance: max. 1.5 Ω.

– Check wiring between unit injector connection and contact 1 of all 3 injectors for open circuit.

Contact 1 (brown) + contact 6

Wire resistance: max. 1.5 Ω.

– Additionally check wires for short to one another. Specification: ∞ Ω.

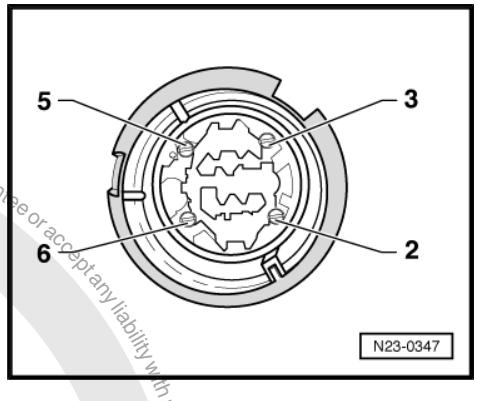

2.11.2 Checking wiring to control unit

– Connect adapter cable, 121-pin -V.A.G 1598/31- to control unit wiring harness.

– Check wiring between adapter cable, 121-pin -V.A.G 1598/31- and connector for open circuit referring to current flow diagram.

Contact 6 + socket 114

Contact 3 + socket 116

Contact 5 + socket 118

Contact 2 + socket 121

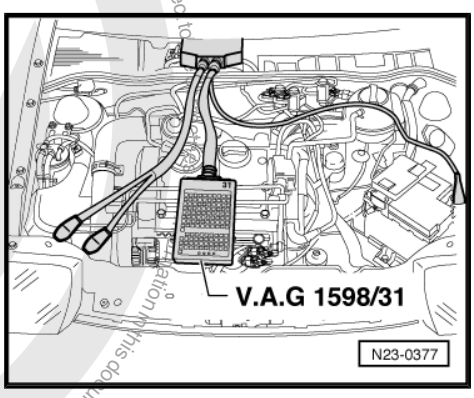

Protected by copyright. Copying for private or commercial purposes, in part or in whole, is not permitted unless authorised by Volkswagen AG. Volkswagen AG does not guarantee or accept any liability with respect to the correctness of information in this document. Copyright by Volkswagen AG.
satelettronica

Wire resistance: max. 1.5 Ω.

– Also check wiring for short to one another, short to vehicle earth and short to battery positive.

Specification: ∞ Ω.

If no fault in lines is detected:

– Renew diesel direct injection system control unit -J248- ⇒ page 191 .

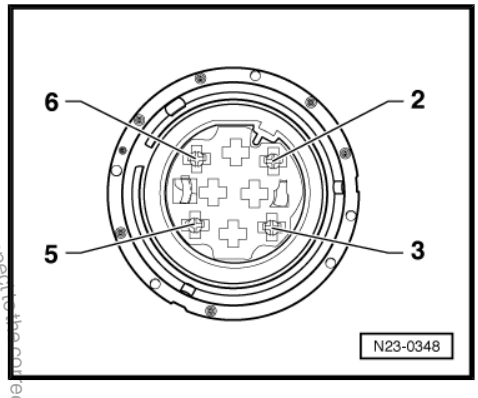

2.12 Checking camshaft position Hall sender -G40-

Special tools and workshop equipment required

- Adapter cable, 121-pin -V.A.G 1598/31-
- Hand multimeter -V.A.G 1526C- or multimeter -V.A.G 1715-
- Auxiliary measuring set -V.A.G 1594C-
- Current flow diagram

Test prerequisite

- Fuses 23 and 27 OK.

Test procedure

– Pull 3-pin connector off Hall sender -G40- ⇒ page 155 .

– Connect hand multimeter -V.A.G 1526C- using aux. cables from auxiliary measuring set -V.A.G 1594C- to measure voltage at contacts 1 (positive) and 3 (earth) of Hall sender -G40- .

– Switch on ignition. Specification: Battery voltage

– Switch off ignition.

If no voltage is present:

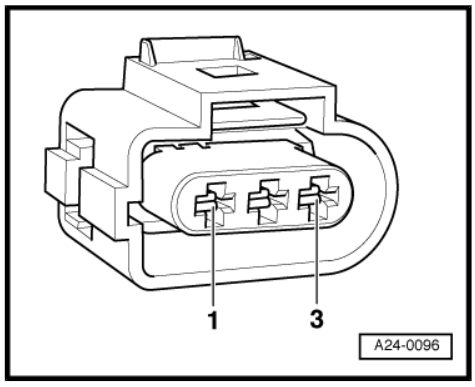

– Connect adapter cable, 121-pin -V.A.G 1598/31- to control unit wiring harness.

– Check wiring between adapter cable, 121-pin -V.A.G 1598/31- and 3-pin connector for open circuit referring to current flow diagram.

Contact 1 + socket 1/2

Contact 2 + socket 109

Contact 3 + socket 101

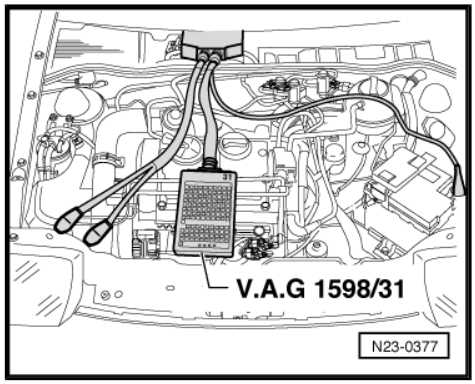

Protected by copyright. Copyright by Volkswagen AG. Volkswagen AG does not guarantee or accept any liability with respect to the correctness of information in this document. Copyright by Volkswagen AG. Reproduction is authorised only for non-commercial purposes, in part or in whole, is not permitted.
satelettronica

Wire resistance: max. 1.5 Ω.

– Also check wiring for short to one another, short to vehicle earth and short to battery positive.

Specification: ∞ Ω.

If no wiring fault is detected and voltage was present between contacts 1 + 3:

– Renew Hall sender -G40- ⇒ page 76 .

If no wiring fault is detected and no voltage was present between contacts 1 + 3:

– Renew diesel direct injection system control unit -J248- ⇒ page 191 .

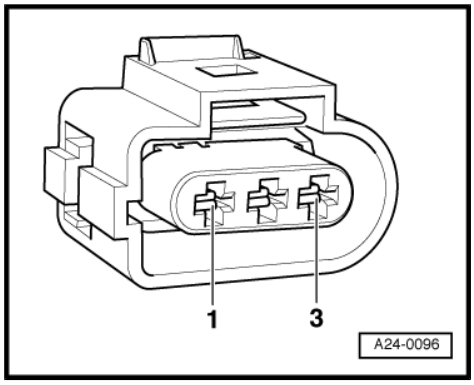

Protected by copyright. Copying for private or commercial purposes, in part or in whole, is not permitted unless authorised by Volkswagen AG. Volkswagen AG does not guarantee or accept any liability with respect to the correctness of information in this document. Copyright by Volkswagen AG.
satelettronica

3 Checking additional signals

3.1 Checking speed signal

Special tools and workshop equipment required

- Fault reader -V.A.G 1551-
- Diagnosis lead -V.A.G 1551/3C-
- Adapter cable, 121-pin -V.A.G 1598/31-
- Hand multimeter -V.A.G 1526C-
- Auxiliary measuring set -V.A.G 1594C-
- Current flow diagram

Test prerequisite

- Speedometer OK, check: ⇒ Rep. Gr. 90

Test procedure

Note

To check the speed signal the vehicle must be driven. To do this a second person is necessary.

WARNING

Secure fault reader to rear seat and operate from this position.

– Connect fault reader -V.A.G 1551- and select engine electronics control unit with “address word 01”. Engine must be idling. (Connecting fault reader and selecting engine electronics control unit ⇒ page 3 .)

Indicated on display:

```
Rapid data transfer                    HELP
Select function XX
```

– Press buttons 0 and 8 for function “Read measured value block” and confirm entry with Q button.

Indicated on display:

```
Reading measured value block
Input display group number XXX
```

– Press buttons 0, 0 and 6 for “display group number 6” and confirm entry with Q button.

– Carry out a road test and compare display with speedometer (2nd person required).

Specification display zone 1: Approx. vehicle speed.

```
Read measured value block 6            ->
     55 km/h      0  0  0     60.5%     255
```

– Press the → button.

– Press buttons 0 and 6 for function “End output” and confirm entry with Q button.

If no speed is indicated:

– Switch off ignition.

Protected by copyright. Copyright by Volkswagen AG. Volkswagen AG does not guarantee or accept any liability with respect to the correctness of information in this document. Copyright by Volkswagen AG.
satelettronica

– Connect adapter cable, 121-pin -V.A.G 1598/31- to control unit wiring harness.

– Connect hand multimeter -V.A.G 1526C- to measure voltage between sockets 4/5 + 20 of adapter cable, 121-pin -V.A.G 1598/31- .

– Switch on ignition.

– Lift vehicle at front left.

– Rotate front wheel and observe voltage display. Specification: between 0 and at least 10 Volt fluctuating

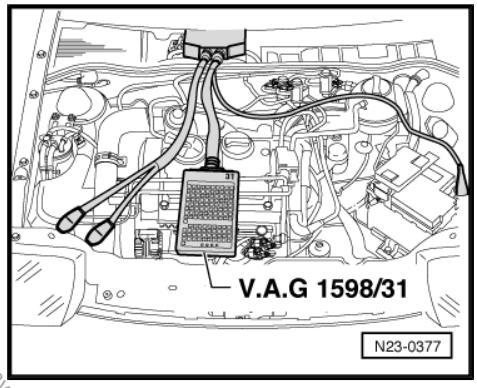

If the display does not fluctuate:

– Check wiring from engine control unit connector contact 20 to dash panel insert for open/short circuit ⇒ Current flow diagrams, Electrical fault finding and Fitting locations.

3.2 Checking signal from/to air conditioning system

Special tools and workshop equipment required

- ♦ Fault reader -V.A.G 1551-
- ♦ Diagnosis lead -V.A.G 1551/3C-
- ♦ Adapter cable, 121-pin -V.A.G 1598/31-
- ♦ Hand multimeter -V.A.G 1526C- or multimeter -V.A.G 1715-
- ♦ Auxiliary measuring set -V.A.G 1594C-
- ♦ Current flow diagram

Test prerequisites

- The function of the air conditioning system must be OK.
- No faults must be stored in fault memory ⇒ page 7 .
- Vehicle at room temperature (warmer than + 15 °C).
- Air conditioning system switched on

Checking compressor shut-off

The engine control unit receives the information that the air conditioner will be switched on shortly via the air conditioner ready signal.

Through another wiring connection, the engine control has the possibility of switching off the air conditioner compressor for various operating conditions:

- ♦ Hard acceleration from low speed
- ♦ Emergency programme (emergency running operation)
- ♦ Coolant temperatures above + 120 °C
- ♦ Each start sequence for approx. 6 seconds.

Test procedure

– Connect fault reader -V.A.G 1551- and select engine electronics control unit with “address word 01”. Engine must be idling. (Connecting fault reader and selecting engine electronics control unit ⇒ page 3 .)

Indicated on display:

```
Rapid data transfer                HELP
Select function XX
```

– Press buttons 0 and 3 for function “final control diagnosis”.

Copyright by Volkswagen AG. Volkswagen AG does not guarantee or accept any liability with respect to the correctness of information in this document. Copyright by Volkswagen AG.
satelettronica

Indicated on display:

```
Rapid data transfer                    Q
03-Final control diagnosis
```

– Confirm entry with Q button.

Indicated on display:

```
Final control diagnosis                ->
Exhaust gas recirculation valve N18
```

– Press the → button.

Indicated on display:

```
Final control diagnosis                ->
Conditioner compressor interruption
```

Air conditioner compressor switch-off is checked.

The air conditioner compressor must stop within 5 seconds (visual check) then start approx. every 5 seconds and then stop again.

If the conditioner compressor is not switched off:

– Proceed with final control diagnosis until completed.

– Press buttons 0 and 6 for function “End data transfer” and confirm entry with Q button.

Protected by copyright. Copying for private or commercial purposes, in part or in whole, is not permitted unless authorised by Volkswagen AG. Volkswagen AG does not guarantee or accept any liability with respect to the correctness of information in this document. Copyright by Volkswagen AG.

satelettronica

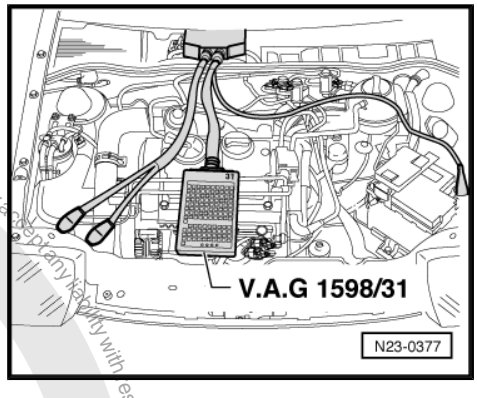

– Connect adapter cable, 121-pin -V.A.G 1598/31- to control unit wiring harness.

– Check wiring between adapter cable, 121-pin -V.A.G 1598/31- socket 29 and air conditioning for open circuit according to current flow diagram.

Wire resistance: max. 1.5 Ω ⇒ Current flow diagrams, Electrical fault finding and Fitting locations

Checking air conditioning system signal to engine speed adaption

The signal ensures that engine control unit keeps the idling speed constant even when the air conditioning system is operating at different loads.

Test procedure

– Connect fault reader -V.A.G 1551- and select engine electronics control unit with “address word 01”. Engine must be idling. (Connecting fault reader and selecting engine electronics control unit ⇒ page 3 .)

Indicated on display:

```
Rapid data transfer                    HELP
Select function XX
```

– Press buttons 0 and 8 for function “Read measured value block” and confirm entry with Q button.

Indicated on display:

```
Reading measured value block
Input display group number XXX
```

– Press buttons 0, 0 and 2 for “display group number 2” and confirm entry with Q button.

Indicated on display: (1...4 = display zones)

```
Read measured value block 2          ->
        1         2         3         4
```

– Observe display in display zone 3, the air conditioner must not be switched on.

Specification: 0 X 0 (air conditioning system signal)

```
Read measured value block 2          ->
        1         2        0 1 0      4
```

– Switch on air conditioning system. Do this, depending on air conditioning system installed by pressing switch “AC” on a manually controlled air conditioning system or pressing switch “Auto” on an automatic (Climatronic) air conditioning system.

– Select lowest temperature and highest blower speed. The air conditioner compressor should run.

– Observe display in display zone 3.

Specification: X X 1 (air conditioning system signal)

```
Read measured value block 2          ->
        1         2        1 1 1      4
```

Significance if display = 1			
x	x	x	Engine operating condition
		1	Air conditioner compressor switched on
	1		Idling switch closed
1			Increased idling speed because air conditioner is switched on

satelettronica

If the specifications are not attained:

– Connect adapter cable, 121-pin -V.A.G 1598/31- to control unit wiring harness.

– Check wiring between adapter cable, 121-pin -V.A.G 1598/31- socket 34 and air conditioning for open circuit according to current flow diagram.

Wire resistance: max. 1.5 Ω ⇒ Current flow diagrams, Electrical fault finding and Fitting locations

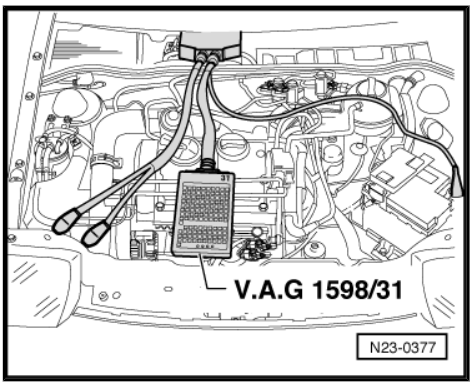

3.3 Checking speed signal

The engine speed sender -G28- signal cannot be used further in its direct form; therefore it is processed by the engine control unit for further consumers. The signal is required, by amongst other things, the automatic gearbox control unit to calculate gear changes and the rev counter in the dash panel.

Special tools and workshop equipment required

- Adapter cable, 121-pin -V.A.G 1598/31-
- Hand multimeter -V.A.G 1526C- or multimeter -V.A.G 1715-
- Auxiliary measuring set -V.A.G 1594C-
- Current flow diagram

Test procedure

– Connect adapter cable, 121-pin -V.A.G 1598/31- to control unit wiring harness.

– Check for open circuit in wiring between dash panel insert and contact 27 of adapter cable, 121-pin -V.A.G 1598/31- using current flow diagram ⇒ Current flow diagrams, Electrical fault finding and Fitting locations.

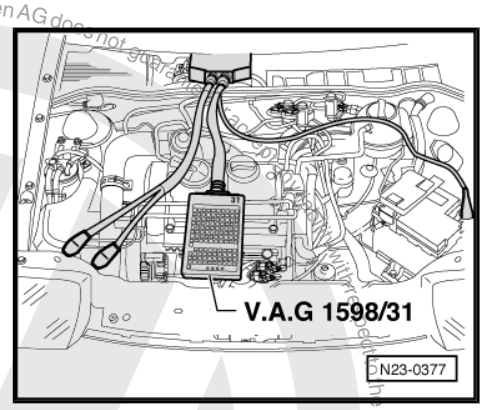

3.4 Checking cruise control system (CCS)

The CCS has, apart from the control switches, no components of its own all functions are provided by the diesel direct injection system.

Special tools and workshop equipment required

- Fault reader -V.A.G 1551-
- Diagnosis lead -V.A.G 1551/3C-
- Adapter cable, 121-pin -V.A.G 1598/31-
- Hand multimeter -V.A.G 1526C- or multimeter -V.A.G 1715-
- Auxiliary measuring set -V.A.G 1594C-
- Current flow diagram

satelettronica

Test procedure

– Connect fault reader -V.A.G 1551- and select engine electronics control unit with “address word 01”. Engine must be idling. (Connecting fault reader and selecting engine electronics control unit ⇒ page 3 .)

Indicated on display:

```
Rapid data transfer                    HELP
Select function XX
```

– Press buttons 0 and 8 for function “Read measured value block” and confirm entry with Q button.

Indicated on display:

```
Reading measured value block
Input display group number XXX
```

– Press buttons 0, 0 and 6 for “display group number 6” and confirm entry with Q button.

– Observe display in display zone 4.

```
Read measured value block 6            ->
      0 km/h     0  0  0     0.0%     0
```

Specification:

0 = Cruise control system switched off

1 = Cruise control system switched on

If 255 is displayed in display zone 4:

```
Read measured value block 6            ->
      0 km/h     0  0  0     0.0%     255
```

– Activate cruise control system ⇒ Current flow diagrams, Electrical fault finding and Fitting locations

If the specifications are not attained:

– Press the → button.

– Press buttons 0 and 6 for function “End output” and confirm entry with Q button.

– Switch off ignition.

– Connect adapter cable, 121-pin -V.A.G 1598/31- to control unit wiring harness.

– Switch on ignition.

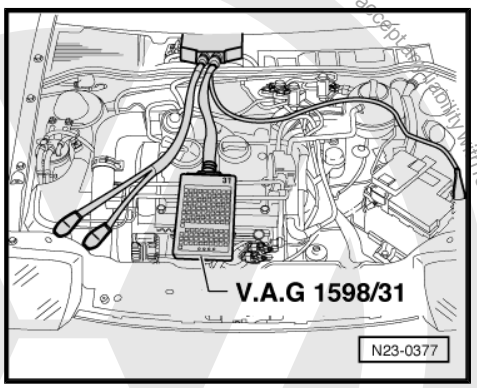

Protected by copyright. Copying for private or commercial purposes, in part or in whole, is not permitted unless authorised by Volkswagen AG. Volkswagen AG does not guarantee or accept any liability with respect to the correctness of information in this document. Copyright by Volkswagen AG.
satelettronica

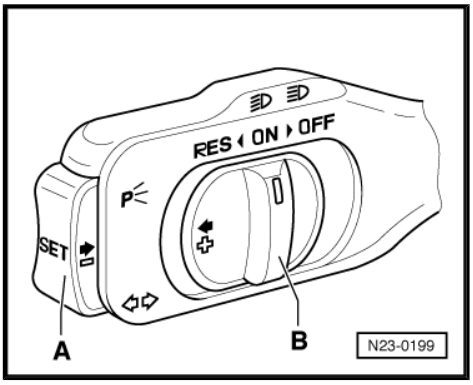

– Connect hand multimeter -V.A.G 1526C- to measure voltage between the following sockets of adapter cable, 121-pin -V.A.G 1598/31- and measure voltage at the switch positions indicated.

– Socket 4/5 + 45 switch -B- to “ON” = 0 V switch -B- to “RES” = battery voltage

– Socket 4/5 + 44 switch -A- not pressed = 0 V switch -A- pressed = battery voltage

– Socket 4/5 +14 switch -B- to “ON” = 0 V switch -B- to “RES” = battery voltage

– Socket 4/5 +46 switch -B- to “ON” = 0 V switch -B- to “RES” = battery voltage

If the specifications are not attained:

– Measure voltage on operating switch directly ⇒ Current flow diagrams, Electrical fault finding and Fitting locations

3.5 Checking data bus

Function

The control units capable of data bus are connected together via two data bus wires twisted together (CAN_High and CAN_Low) and exchange information (messages). Information not available in the data bus will be recognised as a fault by the engine control unit as well as other CAN data bus control units.

Further information: ⇒ Self-study programme No. 186 ; ”The CAN data bus”.

Test prerequisite

• A fault has been recognised by the CAN data bus self-diagnosis.

Special tools and workshop equipment required

♦ Adapter cable, 121-pin -V.A.G 1598/31-

♦ Hand multimeter -V.A.G 1526C- or multimeter -V.A.G 1715-

♦ Auxiliary measuring set -V.A.G 1594C-

♦ Current flow diagram

Test procedure

– Switch off ignition.

– Release connectors on diesel direct injection system control unit -J248- and unplug connectors.

– Connect adapter cable, 121-pin -V.A.G 1598/31- to diesel direct injection system control unit -J248- The control unit wiring harness is not connected by this action.

– Check terminal resistor in diesel direct injection system control unit -J248- :

– For this, perform resistance measurement between sockets 6 + 7 of adapter cable, 121-pin -V.A.G 1598/31- : specification: 60…72 Ω

If the resistance measurement is outside the specified range:

– Renew diesel direct injection system control unit -J248- ⇒ page 191 .

Copyright by Volkswagen AG. Volkswagen AG does not guarantee or accept any liability with respect to the correctness of information in this document. Copyright by Volkswagen AG. Any copy copyright copyright for commercial purposes, in part or in whole, is not permitted unless authorised by Volkswagen AG.
satelettronica

If the resistance value is within the specified range:

– Eliminate the fault in wiring and in other data bus components according to current flow diagrams ⇒ Current flow diagrams, Electrical fault finding and Fitting locations.

Protected by copyright. Copying for private or commercial purposes, in part or in whole, is not permitted unless authorised by Volkswagen AG. Volkswagen AG does not guarantee or accept any liability with respect to the correctness of information in this document. Copyright by Volkswagen AG.

satelettronica

4 Renewing, coding and adapting engine control unit

4.1 Renewing diesel direct injection system control unit -J248-

Special tools and workshop equipment required

- ♦ Fault reader -V.A.G 1551-
- ♦ Diagnosis lead -V.A.G 1551/3C-

Procedure

- – First print out the control unit identification and thereby the previous control unit coding as follows:
- – Connect fault reader -V.A.G 1551- and select engine electronics control unit with “address word 01” ⇒ page 3 .

On display of fault reader -V.A.G 1551- the control unit identification is indicated, e.g.:

```
045906019 1.4l R3 EDC 0000 SG 1040    ->
Coding 00002                    WSC 00000
```

- – Print out the control unit identification by pressing the fault reader Print button.
- – Press GoTo button.
- – Press buttons 0 and 6 for function “End output” and confirm entry with Q button.
- – Switch off ignition.
- – Remove wiper arms and cowl panel: ⇒ Rep. Gr. 92
- – Release connectors on diesel direct injection system control unit -J248- and unplug connectors.
- – Unclip the diesel direct injection system control unit -J248- from the retainer -arrows-.
- – Install the new diesel direct injection system control unit -J248- .
- – Check the previous coding and code the new diesel direct injection system control unit -J248- ⇒ page 191
- – Adapt engine control unit to electronic immobilizer ⇒ page 192 .
- – Then interrogate the fault memory of the new engine control unit and erase the fault memory if necessary, erase fault memory ⇒ page 8 .

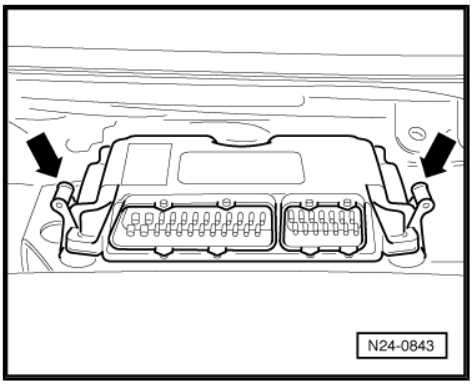

4.2 Coding diesel direct injection system control unit -J248-

If the appropriate code for the vehicle is not displayed or if the diesel direct injection system control unit -J248- has been renewed, the control unit must be coded as follows.

Special tools and workshop equipment required

- ♦ Fault reader -V.A.G 1551-
- ♦ Diagnosis lead -V.A.G 1551/3C-

Procedure

- – Connect fault reader -V.A.G 1551- and select engine electronics control unit with “address word 01”. When doing this

Volkswagen AG. Volkswagen AG does not guarantee or accept any liability with respect to the correctness of information in this document. Copyright by Volkswagen AG. Protected by copyright. Copying for private or commercial purposes, in part or in whole, is not permitted unless authorised by Volkswagen AG.
satelettronica

the ignition must be switched on. (Connecting fault reader and selecting engine electronics control unit ⇒ page 3 .)

– Press the [→] button.

Indicated on display:

```
Rapid data transfer                    HELP
Select function XX
```

– Press buttons [0] and [7] for function “Coding control unit” and confirm entry with [Q] button.

Indicated on display:

```
Coding control unit                       Q
Input code number xxxxx    (0
```

– Enter appropriate code number for vehicle and confirm with [Q] button.

Code number	For vehicles with
00001	Automatic gearbox
00002	Manual gearbox
00003	Crash shut-off and CAN data bus manual gearbox and ABS

On display of fault reader -V.A.G 1551- the control unit identification is indicated, e.g.:

```
045906019 1.4l R3 EDC 0000 SG 1040     -V-
Coding 00002                      WSC 00000
```

– Switch ignition off and then on again.

Note

The coding entered will be activated by switching the ignition off and then on again. If after entering the valid code the ignition is not switched off and on again, the fault “Control unit incorrectly coded” cannot be erased.

– Adapt diesel direct injection system control unit -J248- to the electronic immobilizer ⇒ page 192

– Erase fault memory ⇒ page 8 .

4.3 Adapting diesel direct injection system control unit -J248- to the electronic immobilizer

Special tools and workshop equipment required

♦ Fault reader -V.A.G 1551-

♦ Diagnosis lead -V.A.G 1551/3C-

Test prerequisite

• Authorized vehicle key required.

Procedure

– Connect fault reader -V.A.G 1551- with diagnosis lead -V.A.G 1551/3C- ⇒ page 3

– Switch on ignition.

– Operate fault reader -V.A.G 1551- taking into account the information on the display:

– Press button 1 for “Rapid data transfer”.

– Press buttons [2] and [5] for address word “immobilizer” and confirm the input with [Q] button.

Protected by copyright. Copying for private or commercial purposes, in any form or medium, is not permitted unless authorised by Volkswagen AG. Volkswagen AG does not guarantee or accept any liability with respect to the correctness of information in this document. Copyright by Volkswagen AG.
satelettronica

– Press the → button.

Indicated on display:

```
Rapid data transfer                    HELP
Select function XX
```

– Press buttons 1 and 0 for the function “Adaption” and confirm input with Q button.

Indicated on display:

```
Adaption
Feed in channel number XX
```

– Press button 0 twice for “Channel number 0” and confirm entry with Q button.

Indicated on display:

```
Adaption                                  Q
Erase learnt values?
```

– Confirm entry with Q button.

Indicated on display:

```
Adaption                                 ->
Learnt values have been erased
```

– Finish adaption by pressing → button.

– Press buttons 0 and 6 for function “End output” and confirm entry with Q button.

– Switch off ignition.

Note

The identity of the diesel direct injection system control unit -J248- is read into the immobilizer control unit when next switching the ignition on.

Protected by copyright. Copying for private or commercial purposes, in part or in whole, is not permitted unless authorised by Volkswagen AG. Volkswagen AG does not guarantee or accept any liability with respect to the correctness of information in this document. Copyright by Volkswagen AG.

satelettronica

26 – Exhaust system

1 Parts of exhaust system

Note

- *Removing and installing exhaust manifold* *⇒ page 142* *.*
- *After working on the exhaust system, ensure that the system is not under stress and that there is sufficient clearance to the bodywork. If necessary, loosen double and single clamps and align silencer and exhaust pipe so that sufficient clearance is maintained to the bodywork and the support rings are evenly loaded.*
- *Renew self-locking nuts.*

1.1 Assembly overview - front exhaust pipe with catalytic converter and attachments

1 - From turbocharger

2 - Seal
- ❑ Renew

3 - 25 Nm
- ❑ Renew

4 - Retaining ring
- ❑ Renew if damaged.

5 - Front exhaust pipe with catalytic converter

6 - To front silencer

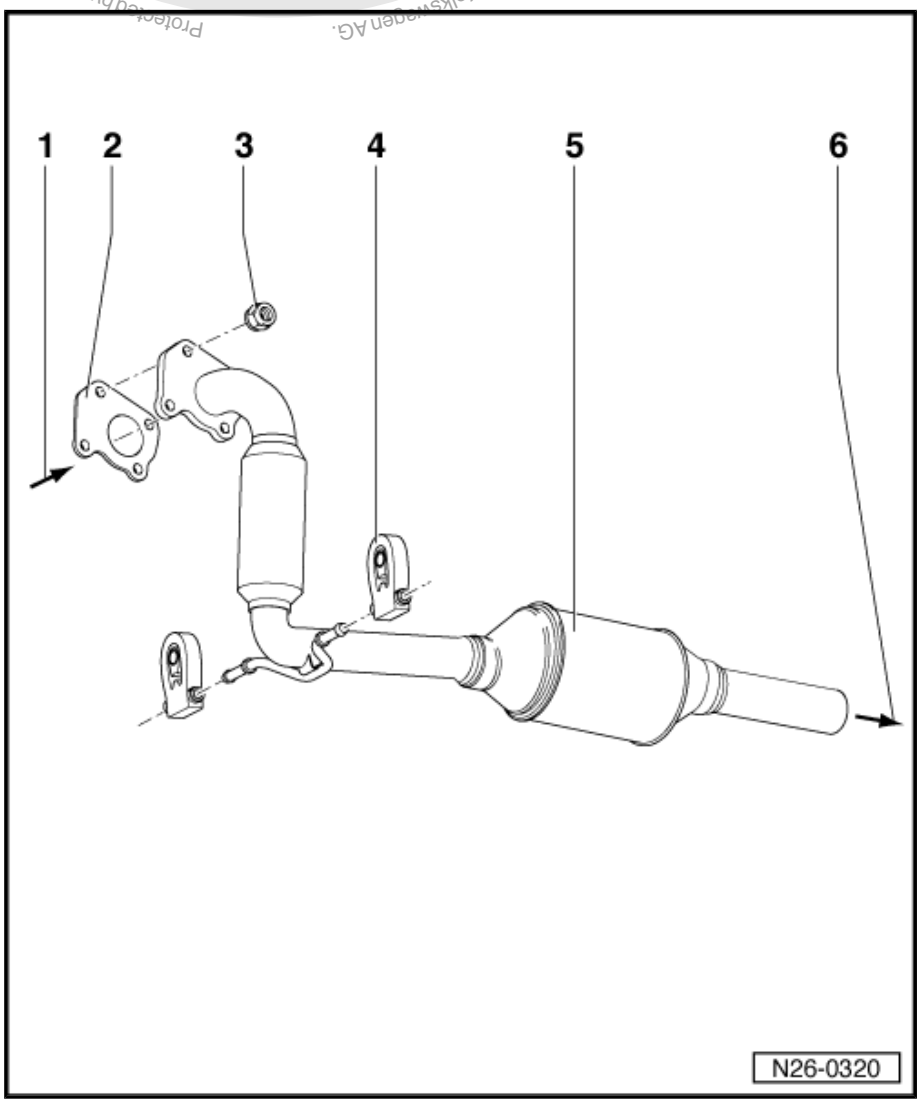

Protected by copyright. Copyright by Volkswagen AG.
Volkswagen AG does not guarantee or accept any liability with respect to the correctness of information in this document. Copyright by Volkswagen AG.
satelettronica

1.2 Assembly overview - Silencer with mountings

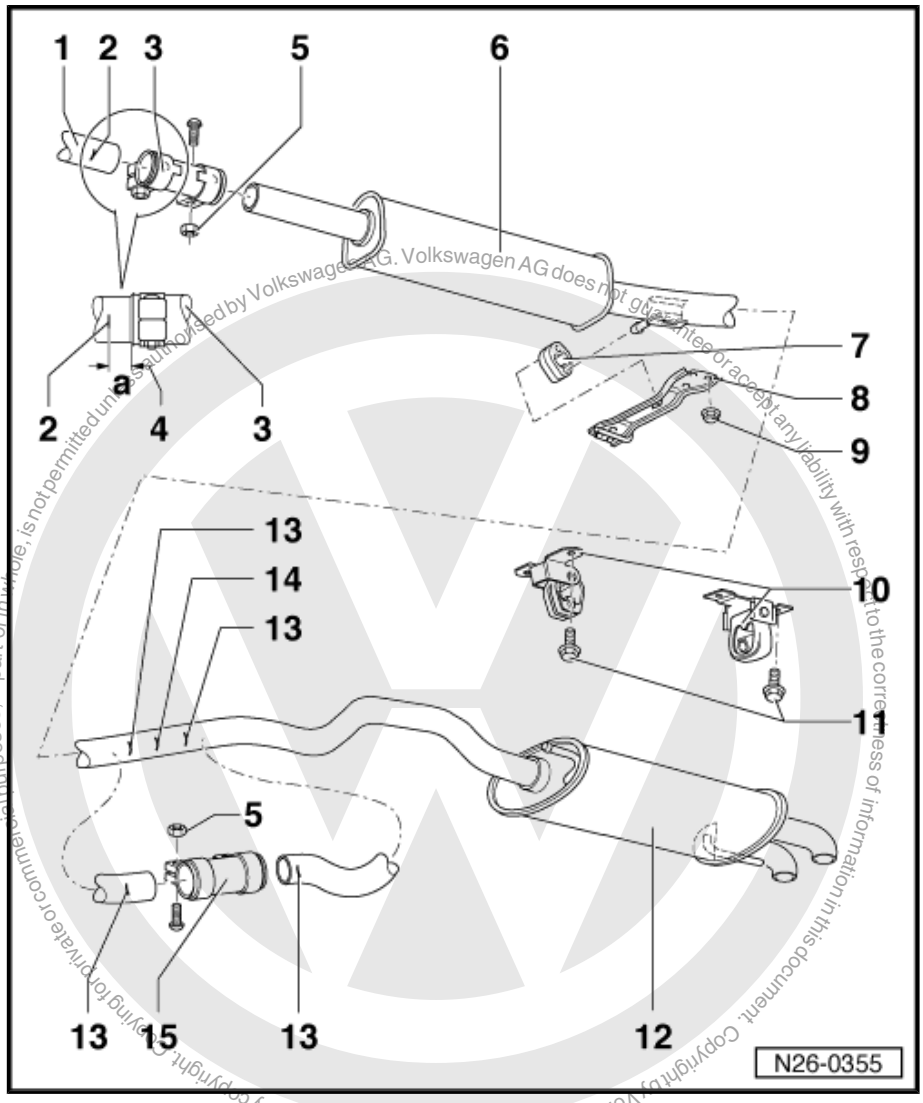

1 - Front exhaust pipe with catalytic converter

2 - Marking

3 - Double clamp

4 - Dimension -a- = approx. 5 mm

5 - 40 Nm

6 - Centre silencer

7 - Retaining ring
- ❑ Renew if damaged.
- ❑ Note installation position ⇒ page 195 .

8 - Connecting piece

9 - 15 Nm

10 - Mounting
- ❑ With retaining ring.
- ❑ Renew if damaged.

11 - 20 Nm + 1/4 turn (90°) further
- ❑ Renew

12 - Rear silencer

13 - Marking
- ❑ Double clamp ⇒ Item 15 (page 195) for repairs

14 - Separating point
- ❑ For repair cases
- ❑ Marked by impressions on exhaust pipe.
- ❑ Centre and rear silencers are installed as a single component during production. In cases of repair, the centre and rear silencer are supplied separately, with a double clamp for connecting.
- ❑ Cut through connecting pipe with e.g. chain pipe cutter -VAS 6254- at right angles at the separating point.

15 - Repair double clamp
- ❑ Must be slid onto the markings ⇒ Item 13 (page 195)

Aligning exhaust system

- Engine must be cold.

– Observe measurement -a- and align exhaust system on retaining ring ⇒ Item 7 (page 195) . Arrow shows in direction of travel, dimension -a- = 5 ± 2 mm

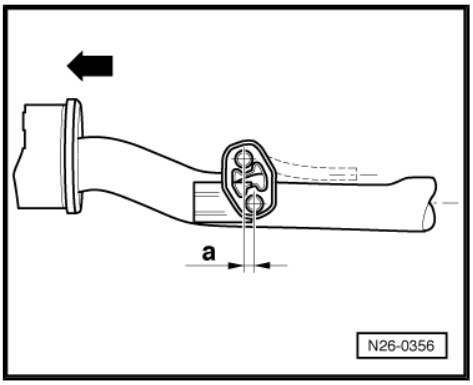

satelettronica

2 Exhaust gas recirculation system

Note

- *The exhaust gas recirculation system is actuated by the diesel direct injection system control unit -J248- via exhaust gas recirculation valve -N18- to the exhaust gas recirculation valve.*
- *The cone-shaped plunger in the mechanical exhaust gas recirculation valve ensures that various cross sectional openings are possible at different plunger lifts.*
- *Pulsed control enables every conceivable valve position.*
- *Renew self-locking nuts.*

2.1 Assembly overview - parts of exhaust gas recirculation

1 - Intake manifold

2 - O-ring
- ❑ Renew

3 - Intake connecting pipe
- ❑ With exhaust gas recirculation valve and intake manifold flap.

4 - Exhaust gas recirculation valve
- ❑ Component of the intake connecting pipe
- ❑ Can only be renewed together with intake connecting pipe
- ❑ Checking ⇒ page 197
- ❑ Checking activation ⇒ page 27 .

5 - 10 Nm

6 - From charge air cooler

7 - Seal
- ❑ Renew

8 - 25 Nm

9 - Exhaust manifold

10 - Connecting pipe

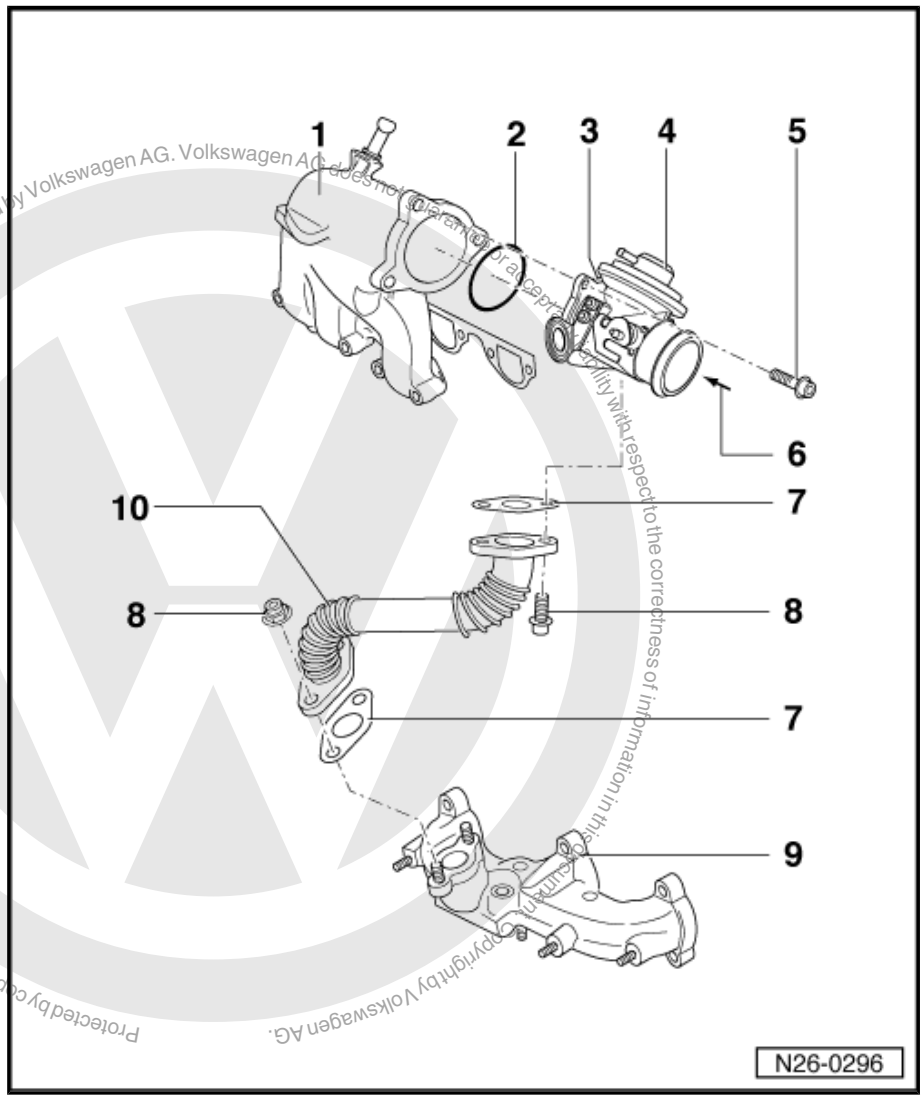

Protected by copyright. Copying for private or commercial purposes, in part or in whole, is not permitted unless authorised by Volkswagen AG. Volkswagen AG does not guarantee or accept any liability with respect to the correctness of information in this document. Copyright by Volkswagen AG.
satelettronica

2.2 Schematic diagram for vacuum hoses

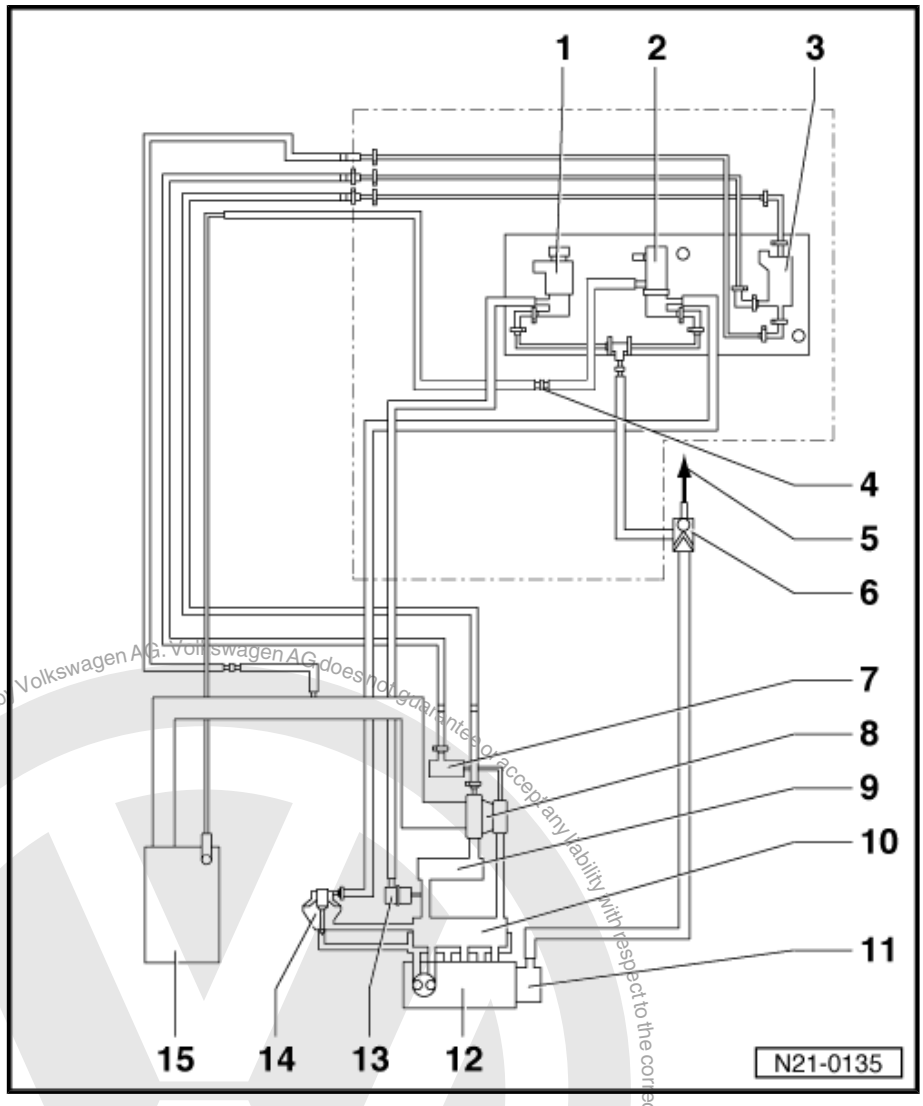

1 - Variable intake manifold flap change-over valve -N239-

2 - Exhaust gas recirculation valve -N18-

3 - Charge pressure control solenoid valve -N75-

- ❑ Checking charge pressure control ⇒ page 148 .

4 - Connector

5 - To brake servo.

6 - Non-return valve

7 - Vacuum unit

- ❑ For charge pressure control.

8 - Turbocharger

9 - Charge air cooler

10 - Intake manifold

11 - Tandem pump

- ❑ For fuel and vacuum supply.
- ❑ Must not be taken apart

12 - Cylinder head

13 - Vacuum unit for intake manifold change-over

14 - Exhaust gas recirculation valve

- ❑ Component of the intake connecting pipe
- ❑ Can only be renewed together with intake connecting pipe

15 - Air mass meter -G70-

2.3 Checking exhaust gas recirculation valve

Special tools and workshop equipment required

Protected by copyright. Copying for private or commercial purposes, in part or in whole, is not permitted unless authorised by Volkswagen AG. Volkswagen AG does not guarantee or accept any liability with respect to the correctness of information in this document. Copyright by Volkswagen AG.
satelettronica

♦ Hand vacuum pump -V.A.G 1390-

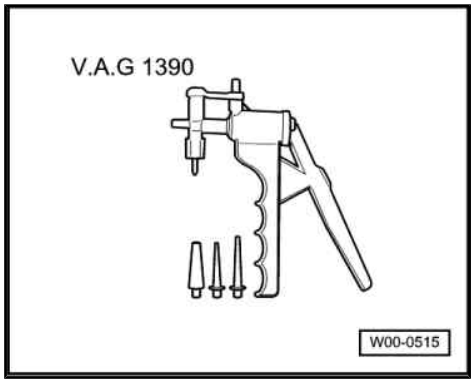

Test procedure

– Remove engine cover.

– Remove charge air pipe / intake connecting pipe connecting hose.

– Pull vacuum hose off exhaust gas recirculation valve.

– Connect hand vacuum pump -V.A.G 1390- to valve.

– Operate hand vacuum pump -V.A.G 1390- and observe diaphragm rod. The diaphragm rod must move in direction of arrow.

– Pull hand vacuum pump hose off exhaust gas recirculation valve. The diaphragm rod must move against -direction of arrow- back to its original position.

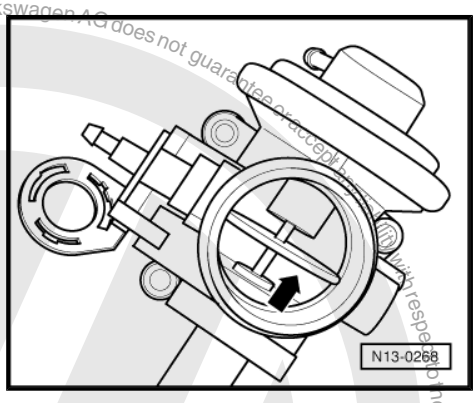

2.4 Checking exhaust gas recirculation

Protected by copyright. Copying for private or commercial purposes, in part or in whole, is not permitted unless authorised by Volkswagen AG. Volkswagen AG does not guarantee or accept any liability with respect to the correctness of information in this document. Copyright by Volkswagen AG.
satelettronica

Special tools and workshop equipment required

- Hand multimeter -V.A.G 1526A- or hand multimeter -V.A.G 1526C-
- Auxiliary measuring set -V.A.G 1594A- or auxiliary measuring set -V.A.G 1594C-
- Adapter cable, 121-pin -V.A.G 1598/31-
- Fault reader -V.A.G 1551-
- Diagnosis lead -V.A.G 1551/3C-
- Current flow diagram

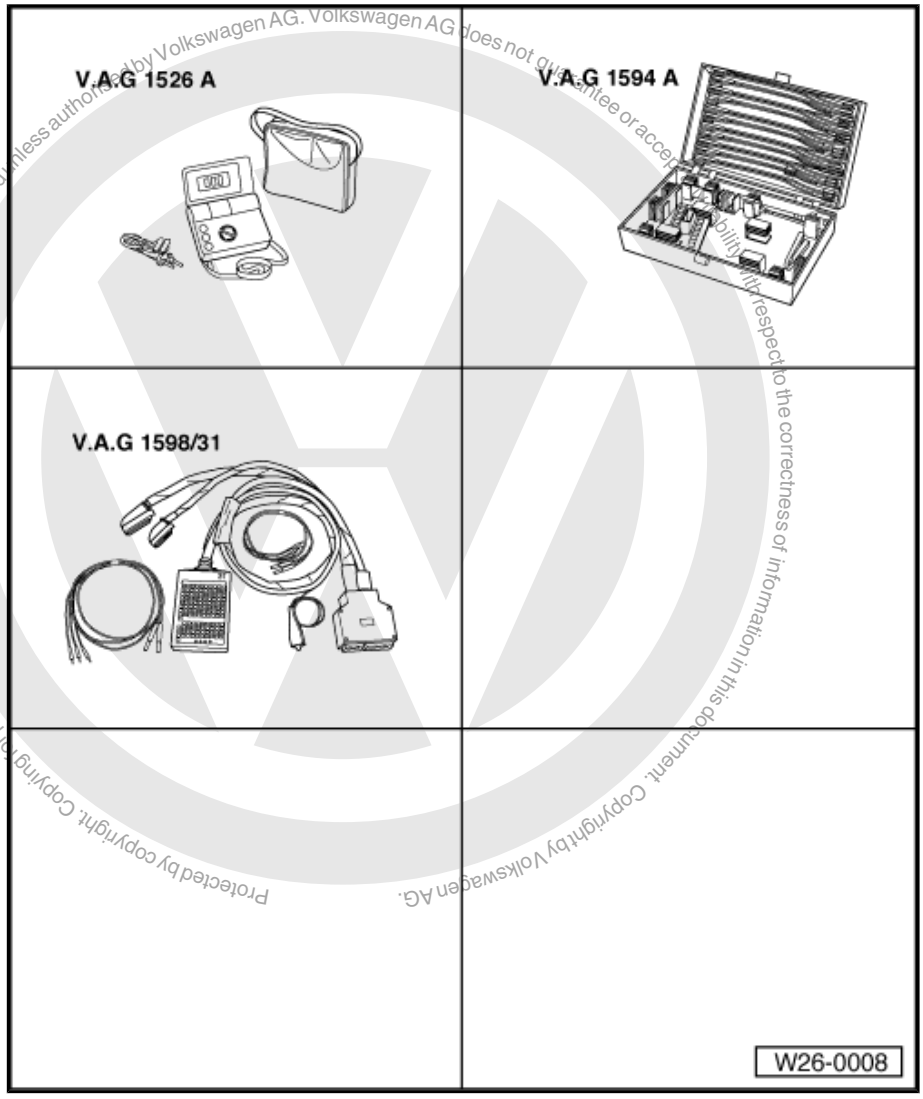

Protected by copyright. Copying for private or commercial purposes, in part or in whole, is not permitted unless authorised by Volkswagen AG. Volkswagen AG does not guarantee or accept any liability with respect to the correctness of information in this document. Copyright by Volkswagen AG.

Test procedure

The exhaust gas recirculation function is checked in function 04 (basic setting). Using this method the exhaust gas recirculation valve -N18- is pulsed every 10 seconds, so that the extreme values for exhaust gas recirculation (air mass meter) can be read in display zone 3 in measured value block 003.

– Connect fault reader -V.A.G 1551- and select engine electronics control unit with “address word 01”. Engine must be idling.

Indicated on display:

```
Rapid data transfer                    HELP
Select function XX
```

– Press buttons 0 and 4 for function “Initiate basic settings” and confirm entry with Q button.

Indicated on display:

```
Basic setting                          HELP
Input display group number XXX
```

– Press buttons 0, 0 and 3 for “display group number 3” and confirm entry with Q button.

satelettronica

Note

When display group 3 is selected and confirmed with Q button, the idling speed in display zone 1 will be raised by the engine control unit to 1350...1450 rpm.

Indicated on display: (1...4 = display zones)

```
System in basic setting 3                 ->
   1400 rpm EGRn.active    500 mg/H    20%
```

The display in display zone 2 must fluctuate every 10 secs. between EGR active and EGRn. active.

The displays in display zones 3 and 4 must fluctuate within following control range:

Note

If a constant value of 539 mg/H is displayed in display zone 3, check air mass meter -G70- : ⇒ page 175

EGRn. active

- Specification display zone 3: 450...600 mg/H (stroke).
- Specification display zone 4: 20 %

EGR active

- Specification display zone 3: 160...310 mg/H (stroke).
- Specification display zone 4: 65 %

If the specifications are not attained:

- Check mechanical exhaust gas recirculation valve ⇒ page 197
- Check vacuum hoses ⇒ page 197 .
- Check exhaust gas recirculation valve -N18- as follows:
- Press the → button.
- Press buttons 0 and 6 for function “End data transfer” and confirm entry with Q button.
- Switch off ignition.
- Pull connector off exhaust gas recirculation valve -N18- .
- Measure resistance at valve. Specification: 14...20 Ω

If the specification is not attained:

- Renew exhaust gas recirculation valve -N18-

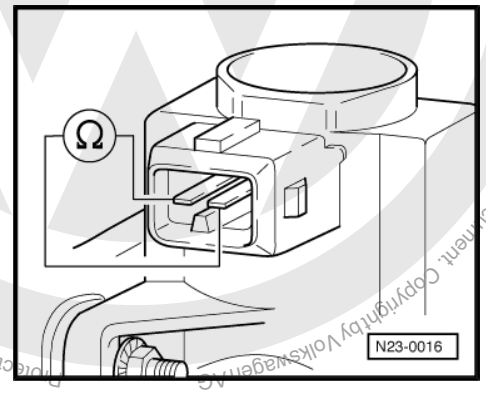

Note

At room temperature the resistance is in the lower tolerance range and at operating temperature in the upper tolerance range.

If the specification is attained:

- Switch on ignition.

satelettronica
Protected by copyright. Copying for private or commercial purposes, in part or in whole, is not permitted unless authorised by Volkswagen AG. Volkswagen AG does not guarantee or accept any liability with respect to the correctness of information in this document. Copyright by Volkswagen AG.

– Measure supply voltage at valve connector contact 1 and at engine earth. Specification: approx. battery voltage

If the specification is not attained:

– Switch off ignition.

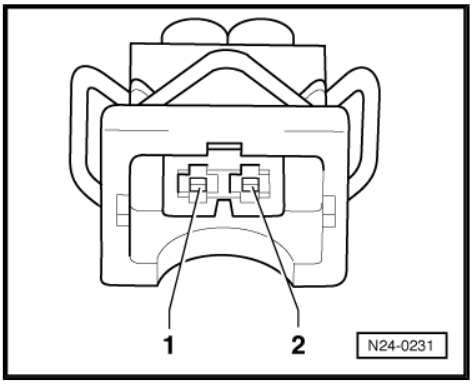

– Connect adapter cable, 121-pin -V.A.G 1598/31- to control unit wiring harness.

– Check wiring between adapter cable, 121-pin -V.A.G 1598/31- and connector for open circuit referring to current flow diagram.

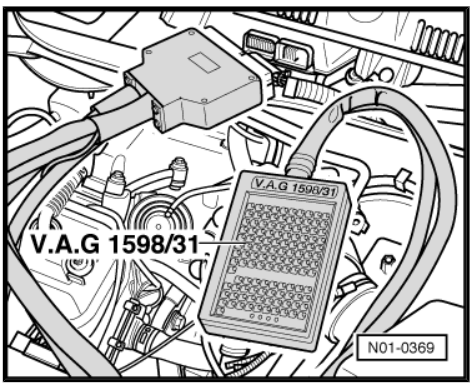

Contact 1 + socket 1 + 2

Contact 2 + socket 61

Wire resistance: max. 1.5 Ω.

– Also check wiring for short to one another, short to vehicle earth and short to battery positive.

Specification: ∞ Ω.

If no fault in lines is detected:

– Renew diesel direct injection system control unit -J248- ⇒ page 191 .

Protected by copyright. Copying for private or commercial purposes, in part or in whole, is not permitted unless authorised by Volkswagen AG. Volkswagen AG does not guarantee or accept any liability with respect to the correctness of information in this document. Copyright by Volkswagen AG.
satelettronica

28 – Glow plug system

1 Glow plug system

1.1 Checking glow plug system

Special tools and workshop equipment required

- Hand multimeter -V.A.G 1526C-

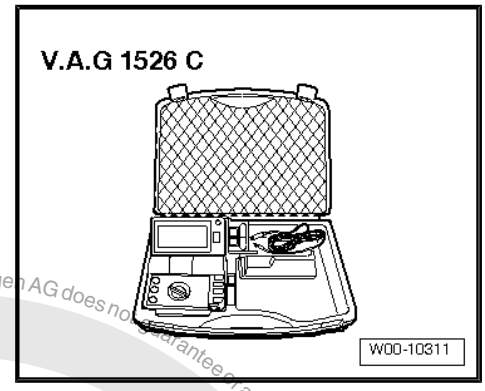

- Auxiliary measuring set -V.A.G 1594C-

Test prerequisites:

- Battery voltage at least 11.5 V
- Ignition switched off
- Diesel direct injection system control unit -J248- OK.
- Fuse for glow plugs (SA3) OK.

Test procedure

– Pull connector off coolant temperature sender -G62- ⇒ page 155 .

Note

Pulling the connector off coolant temperature sender -G62- simulates engine condition "cold" and when switching the ignition on, the relevant glow period is performed.

– Pull glow plug connectors off glow plugs.

– Connect hand multimeter -V.A.G 1526C- to measure voltage between glow plug connector and vehicle earth.

Protected by copyright. Copying for private or commercial purposes, in part or in whole, is not permitted unless authorised by Volkswagen AG. Volkswagen AG does not guarantee or accept any liability with respect to the correctness of information in this document. Copyright by Volkswagen AG.
satelettronica

– Switch on ignition. Approx. battery voltage must be displayed for approx. 20 seconds.

– If no voltage is present: ⇒ Current flow diagrams, Electrical fault finding and Fitting locations

1.2 Checking glow plugs

Special tools and workshop equipment required

♦ Voltage tester -V.A.G 1527B-

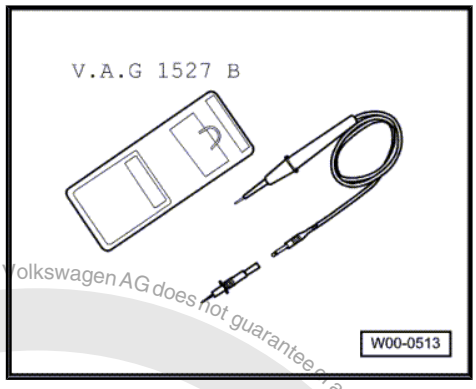

♦ Auxiliary measuring set -V.A.G 1594C-

♦ U/J extension and socket, 10 mm -3220-

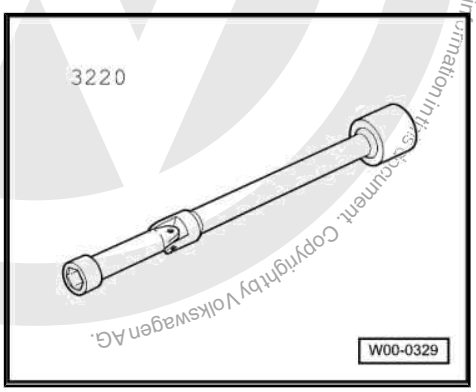

Protected by copyright. Copying for private or commercial purposes, in part or in whole, is not permitted unless authorised by Volkswagen AG. Volkswagen AG does not guarantee or accept any liability with respect to the correctness of information in this document. Copyright by Volkswagen AG.
satelettronica

Test prerequisites:

- Battery voltage at least 11.5 V
- Ignition switched off

Test procedure

– Pull glow plug connectors off glow plugs.

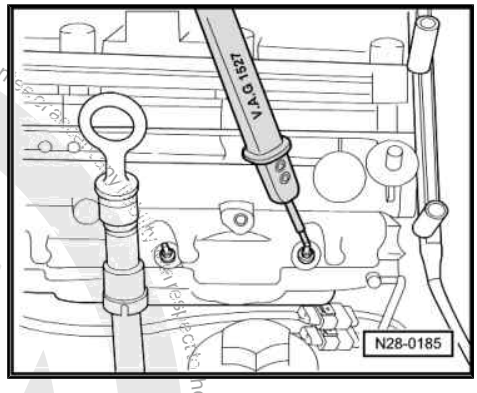

– Connect voltage tester -V.A.G 1527B- cable to battery positive (+), using clips from auxiliary measuring set -V.A.G 1594C- .
– Place test probe of voltage tester -V.A.G 1527B- on each glow plug one after the other.

Diode lights up: Glow plug OK.

If diode does not light up: fit a new glow plug

– Remove and install glow plugs with U/J extension and socket, 10 mm -3220- .

Torque setting: 15 Nm.

Protected by copyright. Copying for private or commercial purposes, in part or in whole, is not permitted unless authorised by Volkswagen AG. Volkswagen AG does not guarantee or accept any liability with respect to the correctness of information in this document. Copyright by Volkswagen AG.

satelettronica